CONNECTING COMPETENCE. SCHRACK TECHNIK

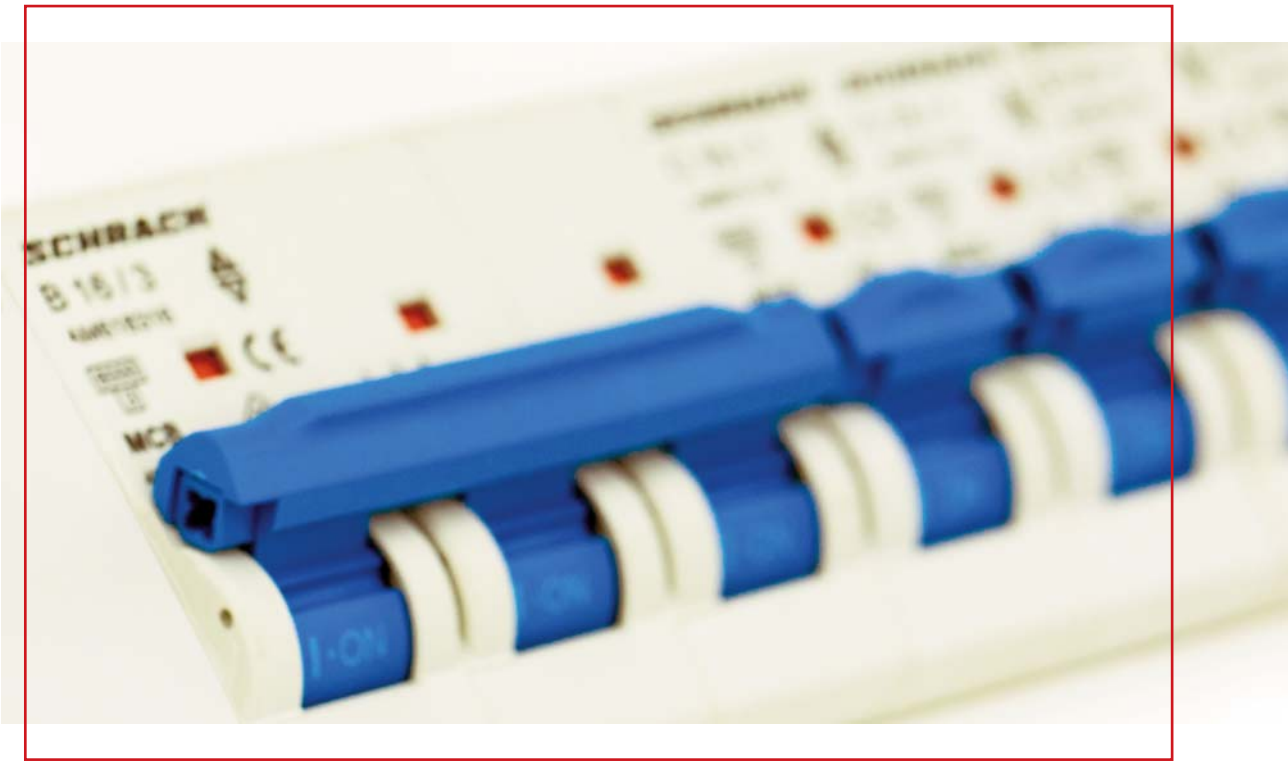


# AMPARO

- MCBS
- RCBOS
- RCCBS
- BUSBARS
- MAIN LOAD-BREAKER SWITCHES
- INDICATOR LIGHTS-LED
- KWH-METERS

**MOBILE AND ONLINE SHOPPING!**

Mobile with the LiVE-PHONE APP

Web shop with Navigator: WWW.SCHRACK.COM

**INCL. AVAILABILITY INFORMATION**

**EX STOCK**

ENERGY INDUSTRY BUILDINGS FACILITIES DATA CABLES LIGHT PHOTOVOLTAIK

## GENERAL INFORMATION

- All **dimensioned drawings** are displayed within the confines of available space on the page and are only intended as a guide.
- All **circuit diagrams** are schematic wiring diagrams which are intended to allow better understanding of the function, and will need to be edited/added to during the course of project planning.
- All **images** represent samples of the product and are intended for information purposes only.

Unless otherwise stipulated, the current version of the General Terms of Delivery issued by The Association of the Austrian Electrical and Electronics Industries "FEEI" shall apply. You can find a copy of these at the end of this catalogue.

No liability for errors in text, type or images; we reserve the right to make changes to technical specifications of the product range.

The user information contained in this catalogue reflect the opinion of the company at the time of writing. The information contained in it was assembled on the basis of published norms, specialist industry presentations, specialist literature and in-house expertise. The content is for informational purposes only and has no validity in law.

## PRODUCT AVAILABILITY SYMBOL

**INCL. AVAILABILITY INFORMATION**

**EX STOCK**

Order no. blue: on stock, usually ready for delivery on the day of order!

Unmarked products may have longer delivery times.
For urgent needs, please contact your Schrack customer representative.

# TABLE OF CONTENTS

VDE

Prüf- und Zertifizierungsinstitut

# ZEICHENGENEHMIGUNG
# MARKS APPROVAL

Schrack Technik GmbH
Seybelgasse 13
1235 WIEN
ÖSTERREICH

ist berechtigt, für ihr Produkt /
*is authorized to use for their product*

**Fehlerstrom-Schutzschalter mit Überstromauslöser, RCBO's**
***Residual current operated circuit-breaker with integral overcurrent protection***
**Serie/series AMPARO AK**

die hier abgebildeten markenrechtlich geschützten Zeichen
für die ab Blatt 2 aufgeführten Typen zu benutzen /
*the legally protected Marks as shown below for the types referred to on page 2 ff.*

Geprüft und zertifiziert nach /
*Tested and certified according to*

**DIN EN 61009-1 (VDE 0664-20):2010-01; EN 61009-1:2004 + Corr.:2006 + A11:2008 + A12:2009+A13:2009**
**DIN EN 61009-2-1 (VDE 0664 Teil 21):1999-12; EN 61009-2-1:1994**
**EN 61009-2-1/A11:1998**

Aktenzeichen: 1910100-1721-0001 / 192361
*File ref.:*
Ausweis-Nr.: 40039466
*Certificate No.*
Weitere Bedingungen siehe Rückseite und Folgeblätter /
*further conditions see overleaf and following pages*
Offenbach, 2014-02-25
(letzte Änderung / updated 2014-03-07 )

Blatt 1
*Page*

http://www.vde.com/zertifikat
http://www.vde.com/certificate

*VDE, the Association for Electrical, Electronic & Information Technologies, is not only a recognised test mark in Europe, it is known worldwide as an icon of quality due to its strict testing standards. Quality is always foremost in what we do. Therefore, we regularly invite an independent institute to audit and certify our conformity with ISO9... standards.*

qualityaustria
Erfolg mit Qualität

ZERTIFIKAT

Die Quality Austria Trainings-, Zertifizierungs- und Begutachtungs GmbH stellt folgender Organisation ein Quality Austria Zertifikat aus:

SCHRACK TECHNIK GMBH
A-1230 Wien, Seybelgasse 13

inkl. Standorte:
Dornbirn, Graz, Innsbruck, Klagenfurt, Linz, Salzburg, Wien

Die Gültigkeit dieses Quality Austria Zertifikates wird durch jährliche Überwachungsaudits und dreijährige Verlängerungsaudits aufrechterhalten.

Dieses Quality Austria Zertifikat bestätigt die Anwendung und Weiterentwicklung eines wirksamen

QUALITÄTSMANAGEMENT-SYSTEMS
entsprechend den Forderungen der
ISO 9001:2008

Registrier-Nummer: 04065/1
Erstausstellung: 28. Februar 2003
Gültig bis: 29. Oktober 2014

Wien, am 14. November 2011

Quality Austria Trainings-, Zertifizierungs- und Begutachtungs GmbH

Konrad Scheiber
Geschäftsführer

Eckehard Bauer, MSc
Fachbeauftragter

Die aktuelle Gültigkeit des Zertifikates ist ausschließlich im Internet unter http://www.qualityaustria.com/de/cert dokumentiert EAC: 29

*Environment is more than a buzzword. In our company we live environmental protection. Therefore, we had an independent institute certify our eco-friendliness according to the ... standard.*

qualityaustria
Erfolg mit Qualität

ZERTIFIKAT

Die Quality Austria Trainings-, Zertifizierungs- und Begutachtungs GmbH stellt folgender Organisation ein **quality**austria-Zertifikat aus:

Dieses **quality**austria-Zertifikat bestätigt die Anwendung und Weiterentwicklung eines wirksamen

**SCHRACK TECHNIK GMBH**
**Headquarters**
A-1230 Wien, Seybelgasse 13
inkl. Standort:
**Schrack Logistikzentrum**
TVS Straße 2, 2353 Guntramsdorf

Technologieunternehmen für Energie-, Daten-, Sicherheit- und Lichttechnik sowie Elektromobilität

**UMWELTMANAGEMENT-SYSTEMS**
entsprechend den Forderungen der
**ISO 14001:2004**

Registrier-Nummer: 01248/0
Erstausstellung: 8. September 2010
Gültig bis: 5. Dezember 2016

Die Gültigkeit dieses **quality**austria Zertifikates wird durch jährliche Überwachungsaudits und dreijährige Verlängerungsaudits aufrechterhalten.

Wien, am 6. Dezember 2013

Quality Austria Trainings-, Zertifizierungs- und Begutachtungs GmbH,
A-1010 Wien, Zelinkagasse 10/3

Konrad Scheiber
Geschäftsführer

Ing. Wolfgang Hackenauer, MSc
Fachbeauftragter

Die aktuelle Gültigkeit des Zertifikates ist ausschließlich im Internet unter http://www.qualityaustria.com/de/cert dokumentiert EAC: 29


OPEN
SCHRACK
IEC/EN 60898-1 Icn=6kA
SCHRACK Technik GmbH
Seybelgasse 13,
1230 Vienna, AUSTRIA
www.schrack.com
2Nm

*The aerodynamic side plate design allows air to pass, which maximises the contact of the bimetallic trigger with the surrounding air. As a result, overload tripping is even more accurate.*

# MCBS, RCCBS, RCBOS

## CONTENTS

## MINIATURE CIRCUIT BREAKER (MCB), SERIES AMPARO

### SCHRACK INFO

- Lift and clamp terminals on both sides
- Terminal guide for secure connection
- Terminal cross section: 1-25 mm²
- Snap-on mounting for DIN rail EN 50 022
- VDE-certificate

### TECHNICAL DATA

| | | | | | |
|---|---|---|---|---|---|
| Standards: | IEC/EN 60898-1, IEC/EN 60947-2 | | | | |
| Rated voltage (AC): | 230/400 - 240/415 V | | | | |
| Rated frequency (AC): | 50/60 Hz | | | | |
| Rated current $I_n$: | 2 A, 4 A, 6 A, 10 A, 16 A, 20 A, 25 A, 32 A, 40 A, 50 A, 63 A | | | | |
| Tripping characteristics: | B, C | | | | |
| Rated breaking capacity: | 6 kA acc. to IEC/EN 60898, 6 kA acc. to IEC/EN 60947-2 | | | | |
| Energy limiting class: | 3 | | | | |
| Rated impulse withstand voltage (1,2/50) $U_{imp}$: | 4 kV | | | | |
| Dielectric test voltage at ind. freq. for 1 min.: | 2 kV | | | | |
| Pollution degree: | 2 | | | | |
| Total powerless at $I_n$ | 1P | 1+N | 2P | 3P | 3+N |
| 2 A | 2 W | 4 W | 4 W | 6 W | 8 W |
| 4 A | 2 W | 4 W | 4 W | 6 W | 8 W |
| 6 A | 2 W | 4 W | 4 W | 6 W | 8 W |
| 10 A | 2 W | 4 W | 4 W | 6 W | 8 W |
| 13 A | 4 W | 7 W | 7 W | 11 W | 14 W |
| 16 A | 4 W | 7 W | 7 W | 11 W | 14 W |
| 20 A | 4 W | 7 W | 7 W | 11 W | 14 W |
| 25 A | 4 W | 7 W | 7 W | 11 W | 14 W |
| 32 A | 4 W | 7 W | 7 W | 11 W | 14 W |
| 40 A | 5 W | 10 W | 10 W | 15 W | 20 W |
| 50 A | 5 W | 10 W | 10 W | 15 W | 20 W |
| 63 A | 5 W | 10 W | 10 W | 15 W | 20 W |
| Internal resistance | | | | | |
| 2 A | 459.8 mΩ | | | | |
| 4 A | 94.007 mΩ | | | | |
| 6 A | 51.787 mΩ | | | | |
| 10 A | 9.989 mΩ | | | | |
| 16 A | 6.31 mΩ | | | | |
| 20 A | 3.832 mΩ | | | | |
| 25 A | 2.671 mΩ | | | | |
| 32 A | 2.009 mΩ | | | | |
| 40 A | 1.66 mΩ | | | | |
| 50 A | 1.226 mΩ | | | | |
| 63 A | 1.055 mΩ | | | | |
| Certificate: | VDE for 1-pole, 2-pole and 3-pole version | | | | |
| Electrical endurance: | > 4.000 operating cycles | | | | |
| Mechanical endurance: | > 20.000 operating cycles | | | | |
| Protection degree: | IP 20 | | | | |
| Reference temperature: | 30°C | | | | |
| Tripping temperature: | -5 °C to +40 °C | | | | |
| Operating temperature: | -35 °C to +70 °C | | | | |
| Terminal connection type: | cable / U-type busbar / pin-type busbar | | | | |
| Connection: | from top and bottom | | | | |
| Terminal cross section: | 1 - 25 mm² | | | | |
| Terminal tightening torque: | 2.5 Nm | | | | |
| Terminal size for busbar: | 10 mm² | | | | |
| Mounting: | on DIN rail EN 60715 (35 mm) by means of fast clip device | | | | |

## TRIPPING CURVES

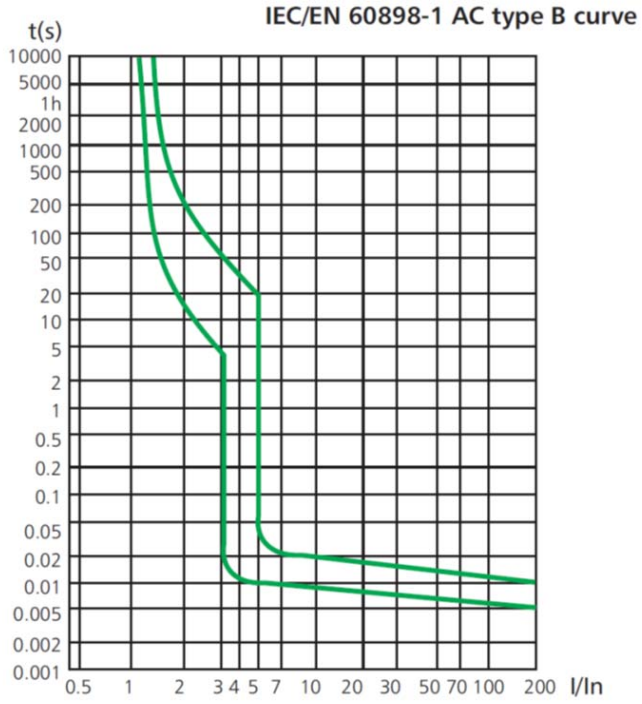


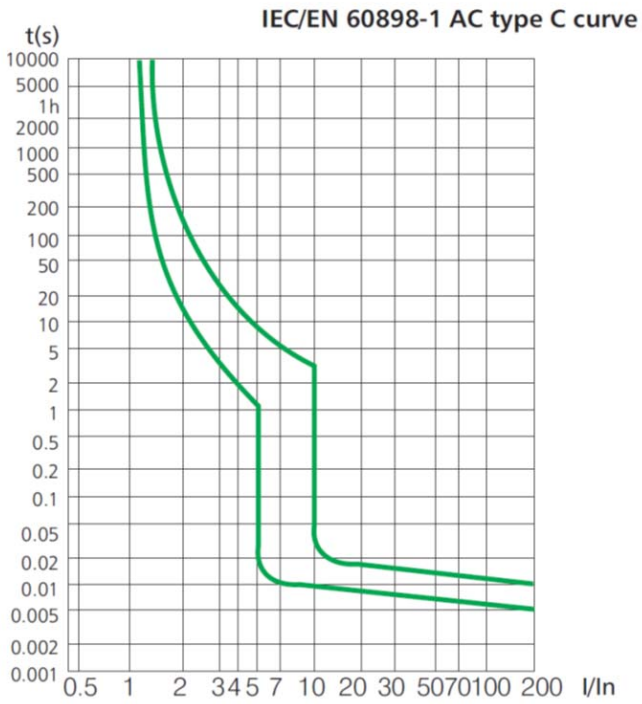


## LET-THROUGH ENERGY

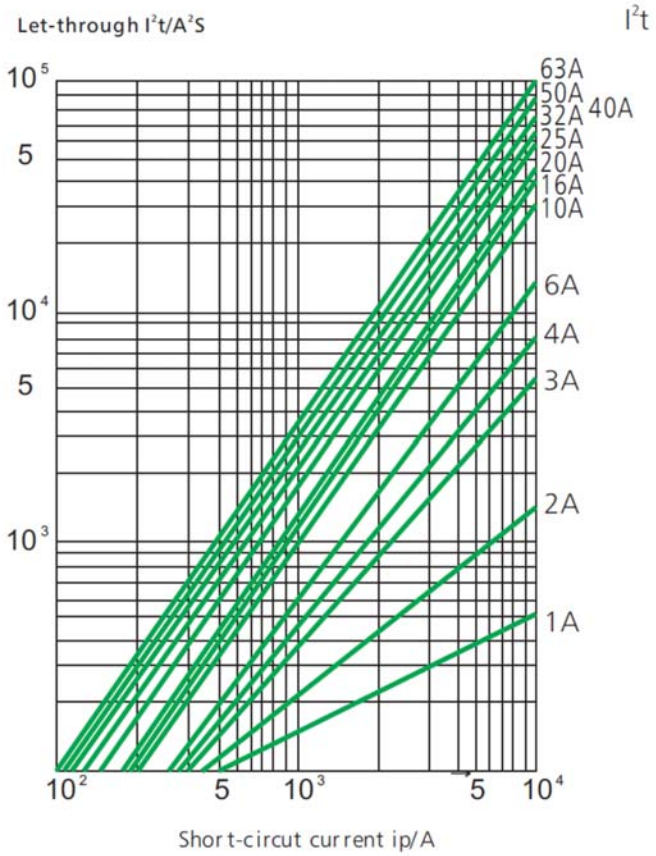

## INFLUENCE OF AMBIENT TEMPERATURE ON TRIPPING CURRENT

| | - 35°C | - 30°C | - 20°C | - 10°C | 0°C | 10°C | 20°C | 30°C | 40°C | 50°C | 60°C | 70°C |
|---|---|---|---|---|---|---|---|---|---|---|---|---|
| 2A | 2,60 | 2,52 | 2,46 | 2,38 | 2,28 | 2,20 | 2,08 | 2,00 | 1,92 | 1,86 | 1,76 | 1,66 |
| 4A | 5,20 | 5,04 | 4,92 | 4,76 | 4,56 | 4,40 | 4,16 | 4,00 | 3,84 | 3,76 | 3,52 | 3,32 |
| 6A | 7,80 | 7,56 | 7,38 | 7,14 | 6,84 | 6,60 | 6,24 | 6,00 | 5,76 | 5,64 | 5,28 | 4,98 |
| 10A | 13,20 | 12,70 | 12,50 | 12,00 | 11,50 | 11,10 | 10,60 | 10,00 | 9,60 | 9,30 | 8,90 | 8,40 |
| 16A | 21,12 | 20,48 | 20,00 | 19,20 | 18,40 | 17,76 | 16,96 | 16,00 | 15,36 | 14,88 | 14,24 | 13,44 |
| 20A | 26,40 | 25,60 | 25,00 | 24,00 | 23,00 | 22,20 | 21,20 | 20,00 | 19,20 | 18,60 | 17,80 | 16,80 |
| 25A | 33,00 | 32,00 | 31,25 | 30,00 | 28,75 | 27,75 | 26,50 | 25,00 | 24,00 | 23,25 | 22,25 | 21,00 |
| 32A | 42,56 | 41,28 | 40,00 | 38,72 | 37,12 | 35,52 | 33,92 | 32,00 | 30,72 | 29,76 | 28,16 | 26,88 |
| 40A | 53,20 | 51,20 | 50,00 | 48,00 | 46,40 | 44,80 | 42,40 | 40,00 | 38,40 | 37,20 | 35,60 | 33,60 |
| 50A | 67,00 | 65,50 | 63,00 | 60,50 | 58,00 | 56,00 | 53,00 | 50,00 | 48,00 | 46,50 | 44,00 | 41,50 |
| 63A | 83,79 | 81,90 | 80,01 | 76,86 | 73,71 | 70,56 | 66,78 | 63,00 | 60,48 | 58,90 | 55,44 | 52,29 |

## SHORT-CUT SELECTIVITY

Selectivity to Fuses characteristic gG/gL

| | | Power supply side: fuse characteristic gG/gL | | | | | | | | |
|---|---|---|---|---|---|---|---|---|---|---|
| | $I_N$ | 20A | 25A | 36A | 50A | 63A | 80A | 100A | 125A | 160A |
| Load side: MCB, series AMPARO characteristic B. C | 2A | 1,2 kA | 4 kA | 6 kA | 6 kA | 6 kA | 6 kA | 6 kA | 6 kA | 6 kA |
| | 4A | 0,6 kA | 0,9 kA | 2,5 kA | 3,8 kA | 6 kA | 6 kA | 6 kA | 6 kA | 6 kA |
| | 6A | 0,5 kA | 0,8 kA | 1,9 kA | 2,5 kA | 4,5 kA | 5 kA | 6 kA | 6 kA | 6 kA |
| | 10A | | 0,7 kA | 1,4 kA | 2,2 kA | 3,2 kA | 3,6 kA | 6 kA | 6 kA | 6 kA |
| | 16A | | | 1,2 kA | 1,8 kA | 2,6 kA | 3 kA | 5,6 kA | 6 kA | 6 kA |
| | 20A | | | | 1,5 kA | 2,2 kA | 2,5 kA | 4,6 kA | 6 kA | 6 kA |
| | 25A | | | | 1,3 kA | 2 kA | 2,2 kA | 4,1 kA | 5,5 kA | 6 kA |
| | 32A | | | | | 1,7 kA | 1,9 kA | 3,8 kA | 4,5 kA | 6 kA |
| | 40A | | | | | | 1,7 kA | 3 kA | 4 kA | 5 kA |
| | 50A | | | | | | 1,5 kA | 2,6 kA | 3,5 kA | 4,5 kA |
| | 63A | | | | | | | 2,4 kA | 3,3 kA | 4,5 kA |

Selectivity to MCCB type MC1

| | | Power supply side: MCCB series MC1 | | | | |
|---|---|---|---|---|---|---|
| | $I_N$ | 40 A | 50 A | 63 A | 80 A | 100 A |
| Load side: MCB, series AMPARO characteristic B | 2A | 2 kA | 6 kA | 6 kA | 6 kA | 6 kA |
| | 4A | 1,2 kA | 2 kA | 3 kA | 3 kA | 6 kA |
| | 6A | 1,2 kA | 2 kA | 2,5 kA | 3 kA | 5 kA |
| | 10A | 1,2 kA | 1,5 kA | 2 kA | 2 kA | 4 kA |
| | 16A | 1 kA | 1,2 kA | 1,5 kA | 2 kA | 3 kA |
| | 20A | 0,8 kA | 1,2 kA | 1,5 kA | 1,5 kA | 3 kA |
| | 25A | 0,7 kA | 1,2 kA | 1,5 kA | 1,5 kA | 3 kA |
| | 32A | - | 1,2 kA | 1 kA | 1,5 kA | 2 kA |
| | 40A | - | - | 1 kA | 1,5 kA | 2 kA |
| | 50A | - | - | - | 1,2 kA | 1,5 kA |
| | 63A | - | - | - | - | 1,5 kA |

## SHORT-CUT SELECTIVITY

Selectivity to MCCB type MC1

| | | Power supply side: MCCB series MC1 | | | | |
|---|---|---|---|---|---|---|
| | $I_N$ | 40 A | 50 A | 63 A | 80 A | 100 A |
| Load side: MCB, series AMPARO characteristic C | 2A | 2 kA | 6 kA | 6 kA | 6 kA | 6 kA |
| | 4A | 1,2 kA | 2 kA | 3 kA | 3 kA | 6 kA |
| | 6A | 1,2 kA | 2 kA | 2,5 kA | 3 kA | 5 kA |
| | 10A | 1,2 kA | 1,5 kA | 2 kA | 2 kA | 4 kA |
| | 16A | 1 kA | 1,2 kA | 1,5 kA | 2 kA | 3 kA |
| | 20A | 0,8 kA | 1,2 kA | 1,5 kA | 1,5 kA | 3 kA |
| | 25A | 0,7 kA | 1,2 kA | 1,5 kA | 1,5 kA | 3 kA |
| | 32A | - | 1,2 kA | 1 kA | 1,5 kA | 2 kA |
| | 40A | - | - | 1 kA | 1,5 kA | 2 kA |
| | 50A | - | - | - | 1,2 kA | 1,5kA |
| | 63A | - | - | - | - | 1,5 kA |

| | | Power supply side: MCCB series MC2 | | | | |
|---|---|---|---|---|---|---|
| | $I_N$ | 40 A | 50 A | 63 A | 80 A | 100 A |
| Load side: MCB, series AMPARO characteristic B | 2A | 3 kA | 6 kA | 6 kA | 6 kA | 6 kA |
| | 4A | 1,2 kA | 1,5 kA | 3 kA | 4 kA | 6 kA |
| | 6A | 1,2 kA | 1,5 kA | 2,5 kA | 3 kA | 6 kA |
| | 10A | 1 kA | 1,5 kA | 2,5 kA | 3 kA | 6 kA |
| | 13A | 1 kA | 1,2 kA | 2 kA | 3 kA | 6 kA |
| | 16A | 1 kA | 1,2 kA | 1,5 kA | 2,5 kA | 6 kA |
| | 20A | 1 kA | 1,2 kA | 1,5 kA | 2 kA | 6 kA |
| | 25A | 0,8 kA | 1 kA | 1,5 kA | 2 kA | 6 kA |
| | 32A | | 1 kA | 1,5 kA | 2 kA | 6 kA |
| | 40A | | | 1,2 kA | 1,5 kA | 6 kA |
| | 50A | | | | 1,5 kA | 6 kA |
| | 63A | | | | | 6 kA |

| | | Power supply side: MCCB series MC2 | | | | |
|---|---|---|---|---|---|---|
| | $I_N$ | 40 A | 50 A | 63 A | 80 A | 100 A |
| Load side: MCB, series AMPARO characteristic C | 2A | 3 kA | 6 kA | 6 kA | 6 kA | 6 kA |
| | 4A | 1,5 kA | 1,5 kA | 3 kA | 4 kA | 6 kA |
| | 6A | 1,2 kA | 1,5 kA | 2,5 kA | 3 kA | 6 kA |
| | 10A | 1 kA | 1,5 kA | 2,5 kA | 3 kA | 6 kA |
| | 13A | 1 kA | 1,2 kA | 2 kA | 3 kA | 6 kA |
| | 16A | 1 kA | 1,2 kA | 1,5 kA | 2,5 kA | 6 kA |
| | 20A | 1 kA | 1,2 kA | 1,5 kA | 1,5 kA | 6 kA |
| | 25A | 0,8 kA | 1 kA | 1,5 kA | 2 kA | 6 kA |
| | 32A | - | 1 kA | 1,5 kA | 2 kA | 6 kA |
| | 40A | - | - | 1,2 kA | 1,5 kA | 6 kA |
| | 50A | - | - | - | 1,5 kA | 6 kA |
| | 63A | - | - | - | - | 6 kA |

## DIMENSIONS

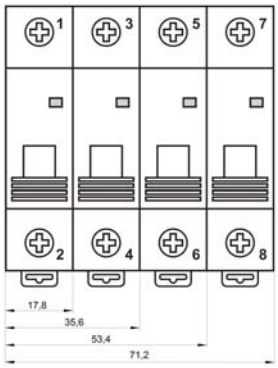


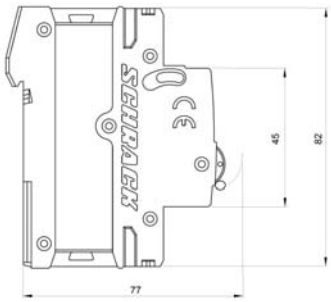


## WIRING DIAGRAM

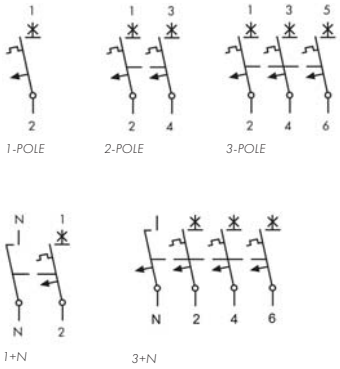


## MINIATURE CIRCUIT BREAKERS (MCB) SERIES AMPARO, 6 kA, 1-POLE

| DESCRIPTION | MW | PU | EAN CODE | AVAILABLE | ORDER NO. |
|---|---|---|---|---|---|
| **CHARACTERISTIC B** | | | | | |
| 2A | 1 | 12 | 9004840010787 | | AM618102 |
| 4A | 1 | 12 | 9004840010794 | | AM618104 |
| 6A | 1 | 12 | 9004840010800 | | AM618106 |
| 10A | 1 | 12 | 9004840010817 | | AM618110 |
| 13A | 1 | 12 | 9004840010824 | | AM618113 |
| 16A | 1 | 12 | 9004840010831 | | AM618116 |
| 20A | 1 | 12 | 9004840010862 | | AM618120 |
| 25A | 1 | 12 | 9004840010879 | | AM618125 |
| 32A | 1 | 12 | 9004840010886 | | AM618132 |
| 40A | 1 | 12 | 9004840010893 | | AM618140 |
| **CHARACTERISTIC C** | | | | | |
| 2A | 1 | 12 | 9004840010909 | | AM617102 |
| 4A | 1 | 12 | 9004840010916 | | AM617104 |
| 6A | 1 | 12 | 9004840010923 | | AM617106 |
| 10A | 1 | 12 | 9004840010930 | | AM617110 |
| 13A | 1 | 12 | 9004840011098 | | AM617113 |
| 16A | 1 | 12 | 9004840011104 | | AM617116 |
| 20A | 1 | 12 | 9004840011111 | | AM617120 |
| 25A | 1 | 12 | 9004840011128 | | AM617125 |
| 32A | 1 | 12 | 9004840011135 | | AM617132 |
| 40A | 1 | 12 | 9004840011142 | | AM617140 |
| 50A | 1 | 12 | 9004840011159 | | AM617150 |
| 63A | 1 | 12 | 9004840011166 | | AM617163 |

## MINIATURE CIRCUIT BREAKERS (MCB) SERIES AMPARO, 6 kA, 1+N

| DESCRIPTION | MW | PU | EAN CODE | AVAILABLE | ORDER NO. |
|---|---|---|---|---|---|
| **CHARACTERISTIC B** | | | | | |
| 6A | 2 | 6 | 9004840011173 | | AM618606 |
| 10A | 2 | 6 | 9004840011180 | | AM618610 |
| 13A | 2 | 6 | 9004840011197 | | AM618613 |
| 16A | 2 | 6 | 9004840011203 | | AM618616 |
| 20A | 2 | 6 | 9004840011210 | | AM618620 |
| 25A | 2 | 6 | 9004840011227 | | AM618625 |
| 32A | 2 | 6 | 9004840011234 | | AM618632 |
| 40A | 2 | 6 | 9004840011241 | | AM618640 |
| **CHARACTERISTIC C** | | | | | |
| 6A | 2 | 6 | 9004840011258 | | AM617606 |
| 10A | 2 | 6 | 9004840011265 | | AM617610 |
| 13A | 2 | 6 | 9004840011272 | | AM617613 |
| 16A | 2 | 6 | 9004840011289 | | AM617616 |
| 20A | 2 | 6 | 9004840011296 | | AM617620 |
| 25A | 2 | 6 | 9004840011302 | | AM617625 |
| 32A | 2 | 6 | 9004840011319 | | AM617632 |
| 40A | 2 | 6 | 9004840011326 | | AM617640 |
| 50A | 2 | 6 | 9004840011333 | | AM617650 |
| 63A | 2 | 6 | 9004840011340 | | AM617663 |

## MINIATURE CIRCUIT BREAKERS (MCB) SERIES AMPARO, 6 kA, 2-POLE

| DESCRIPTION | MW | PU | EAN CODE | AVAILABLE | ORDER NO. |
|---|---|---|---|---|---|
| **CHARACTERISTIC B** | | | | | |
| 6A | 2 | 6 | 9004840011357 | | AM618206 |
| 10A | 2 | 6 | 9004840011364 | | AM618210 |
| 13A | 2 | 6 | 9004840011371 | | AM618213 |
| 16A | 2 | 6 | 9004840011388 | | AM618216 |
| 20A | 2 | 6 | 9004840011395 | | AM618220 |
| 25A | 2 | 6 | 9004840011401 | | AM618225 |
| 32A | 2 | 6 | 9004840011418 | | AM618232 |
| 40A | 2 | 6 | 9004840011425 | | AM618240 |
| **CHARACTERISTIC C** | | | | | |
| 6A | 2 | 6 | 9004840011432 | | AM617206 |
| 10A | 2 | 6 | 9004840011449 | | AM617210 |
| 13A | 2 | 6 | 9004840011487 | | AM617213 |
| 16A | 2 | 6 | 9004840011494 | | AM617216 |
| 20A | 2 | 6 | 9004840011500 | | AM617220 |
| 25A | 2 | 6 | 9004840011517 | | AM617225 |
| 32A | 2 | 6 | 9004840011524 | | AM617232 |
| 40A | 2 | 6 | 9004840011531 | | AM617240 |
| 50A | 2 | 6 | 9004840011548 | | AM617250 |
| 63A | 2 | 6 | 9004840011555 | | AM617263 |

## MINIATURE CIRCUIT BREAKERS (MCB) SERIES AMPARO, 6 kA, 3-POLE

| DESCRIPTION | MW | PU | EAN CODE | AVAILABLE | ORDER NO. |
|---|---|---|---|---|---|
| **CHARACTERISTIC B** | | | | | |
| 6A | 3 | 4 | 9004840011562 | | AM618306 |
| 10A | 3 | 4 | 9004840011579 | | AM618310 |
| 13A | 3 | 4 | 9004840011586 | | AM618313 |
| 16A | 3 | 4 | 9004840011593 | | AM618316 |
| 20A | 3 | 4 | 9004840012026 | | AM618320 |
| 25A | 3 | 4 | 9004840012040 | | AM618325 |
| 32A | 3 | 4 | 9004840012057 | | AM618332 |
| 40A | 3 | 4 | 9004840013146 | | AM618340 |
| **CHARACTERISTIC C** | | | | | |
| 6A | 3 | 4 | 9004840013153 | | AM617306 |
| 10A | 3 | 4 | 9004840013160 | | AM617310 |
| 13A | 3 | 4 | 9004840013177 | | AM617313 |
| 16A | 3 | 4 | 9004840013184 | | AM617316 |
| 20A | 3 | 4 | 9004840013191 | | AM617320 |
| 25A | 3 | 4 | 9004840013207 | | AM617325 |
| 32A | 3 | 4 | 9004840013214 | | AM617332 |
| 40A | 3 | 4 | 9004840013221 | | AM617340 |
| 50A | 3 | 4 | 9004840013306 | | AM617350 |
| 63A | 3 | 4 | 9004840013580 | | AM617363 |

## MINIATURE CIRCUIT BREAKERS (MCB) SERIES AMPARO, 6 kA, 3+N

| DESCRIPTION | MW | PU | EAN CODE | AVAILABLE | ORDER NO. |
|---|---|---|---|---|---|
| **CHARACTERISTIC B** | | | | | |
| 6A | 4 | 3 | 9004840013597 | | AM618806 |
| 10A | 4 | 3 | 9004840013603 | | AM618810 |
| 13A | 4 | 3 | 9004840013627 | | AM618813 |
| 16A | 4 | 3 | 9004840013634 | | AM618816 |
| 20A | 4 | 3 | 9004840013641 | | AM618820 |
| 25A | 4 | 3 | 9004840013658 | | AM618825 |
| 32A | 4 | 3 | 9004840013665 | | AM618832 |
| 40A | 4 | 3 | 9004840013672 | | AM618840 |
| **CHARACTERISTIC C** | | | | | |
| 6A | 4 | 3 | 9004840013689 | | AM617806 |
| 10A | 4 | 3 | 9004840013696 | | AM617810 |
| 13A | 4 | 3 | 9004840013702 | | AM617813 |
| 16A | 4 | 3 | 9004840013719 | | AM617816 |
| 20A | 4 | 3 | 9004840013726 | | AM617820 |
| 25A | 4 | 3 | 9004840013733 | | AM617825 |
| 32A | 4 | 3 | 9004840013740 | | AM617832 |
| 40A | 4 | 3 | 9004840013757 | | AM617840 |
| 50A | 4 | 3 | 9004840013764 | | AM617850 |
| 63A | 4 | 3 | 9004840013771 | | AM617863 |

# MINIATURE CIRCUIT BREAKER (MCB), SERIES AMPARO, 1+N ON 1MW

AM418510

## SCHRACK INFO

- For permanent mounting technology
- Terminal guide for secure connection
- Terminal cross section: 1-16 mm²
- Snap-on mounting for DIN rail EN 50 022
- VDE-certificate

## TECHNICAL DATA

| | |
|---|---|
| Standards: | IEC/EN 60898-1 |
| Rated voltage (AC): | 230/400 V |
| Rated frequency (AC): | 50/60 Hz |
| Insulation voltage $U_i$: | 500 V |
| Rated current $I_n$: | 6 A, 10 A, 13 A, 16 A, 20 A, 25 A, 32 A |
| Tripping characteristics: | B, C |
| Rated breaking capacity: | 4.5 kA acc. to IEC/EN 60898 |
| Energy limiting class: | 3 |
| Rated impulse withstand voltage (1,2/50) $U_{imp}$: | 4 kV |
| Dielectric test voltage at ind. freq. for 1 min.: | 2 kV |
| Pollution degree: | 2 |
| Total powerless at $I_n$: | |
| 6 A | 4 W |
| 10 A | 4 W |
| 16 A | 7 W |
| 20 A | 7 W |
| 25 A | 7 W |
| 32 A | 7 W |
| Certificate: | VDE |
| Electrical endurance: | > 8.000 operating cycles |
| Mechanical endurance: | > 20.000 operating cycles |
| Protection degree: | IP 20 |
| Reference temperature: | 30°C |
| Tripping temperature: | -5 °C to +40 °C |
| Operating temperature: | -35 °C to +70 °C |
| Terminal connection type: | cable / pin-type busbar |
| Terminal cross section: | 16 mm² |
| Terminal tightening torque: | 2 Nm |
| Mounting: | on DIN rail EN 60715 (35 mm) by means of fast clip device |

## TRIPPING CURVES

IEC/EN 60898-1 AC type B Curve

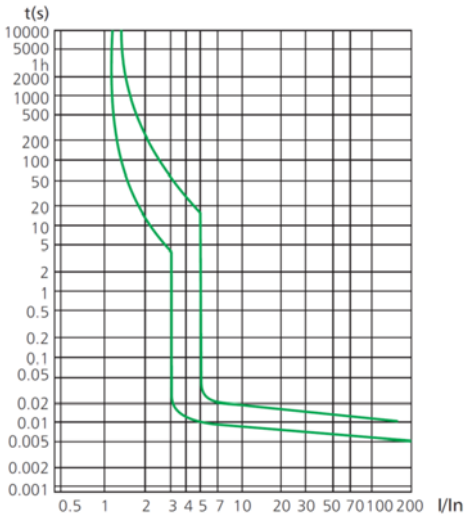


IEC/EN 60898-1 AC type C Curve

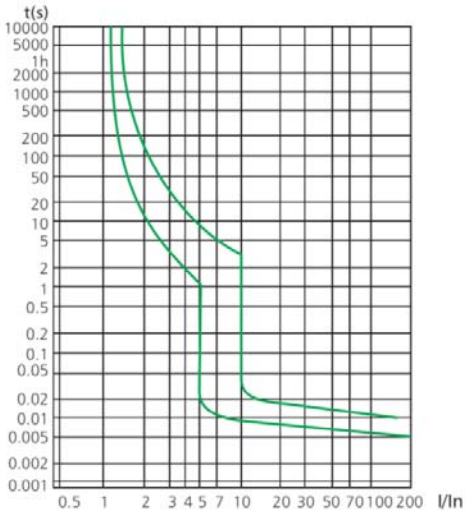

## INFLUENCE OF AMBIENT TEMPERATURE ON TRIPPING CURRENT

| | - 10°C | 0°C | 10°C | 20°C | 30°C | 40°C | 50°C | 55°C | 60°C |
|---|---|---|---|---|---|---|---|---|---|
| 6A | 7,20 | 6,90 | 6,60 | 6,30 | 6,00 | 5,70 | 5,40 | 5,25 | 5,10 |
| 10A | 12,00 | 11,50 | 11,00 | 10,50 | 10,00 | 9,50 | 9,00 | 8,75 | 8,50 |
| 13A | 15,60 | 14,95 | 14,30 | 13,65 | 13,00 | 12,35 | 11,70 | 11,38 | 11,05 |
| 16A | 19,20 | 18,40 | 17,60 | 16,80 | 16,00 | 15,20 | 14,40 | 14,00 | 13,60 |
| 20A | 24,00 | 23,00 | 22,00 | 21,00 | 20,00 | 19,00 | 18,00 | 17,50 | 17,00 |
| 25A | 30,00 | 28,75 | 27,50 | 26,25 | 25,00 | 23,75 | 22,50 | 21,88 | 21,25 |
| 32A | 38,40 | 36,80 | 35,20 | 33,60 | 32,00 | 30,40 | 28,80 | 28,00 | 27,20 |

## SHORT-CUT SELECTIVITY

Selectivity to Fuses characteristic gG/gL

| | | Power supply side: fuse characteristic gG/gL | | | | | | |
|---|---|---|---|---|---|---|---|---|
| | $I_N$ | 20A | 25A | 36A | 50A | 63A | 80A | 100A |
| Load side: MCB, series AM characteristic B. C | 6A | 0,5 kA | 0,8 kA | 1,9 kA | 2,5 kA | 4,5 kA a) | 4,5 kA a) | 4,5 kA a) |
| | 10A | | 0,7 kA | 1,4 kA | 2,2 kA | 3,2 kA | 3,6 kA | 4,5 kA a) |
| | 13A | | 0,6 kA | 1,3 kA | 2,0 kA | 2,8 kA | 3,2 kA | 4,5 kA a) |
| | 16A | | | 1,2 kA | 1,8 kA | 2,6 kA | 3 kA | 4,5 kA a) |
| | 20A | | | | 1,5 kA | 2,2 kA | 2,5 kA | 4,5 kA a) |
| | 25A | | | | 1,3 kA | 2,0 kA | 2,2 kA | 4,1 kA |
| | 32A | | | | | 1,7 kA | 1,9 kA | 3,8 kA |

a) Selectivity limit current $I_s$ = rated breaking capacity $I_{cn}$ of the MCB

Selectivity to MCCB type MC1

| | | Power supply side: MCCB series MC1 | | | | |
|---|---|---|---|---|---|---|
| | $I_N$ | 40 A | 50 A | 63 A | 80 A | 100 A |
| Load side: MCB, series AM characteristic B | 6A | 1,2 kA | 2 kA | 2,5 kA | 3 kA | 4,5 kA a) |
| | 10A | 1,2 kA | 1,5 kA | 2 kA | 2 kA | 4 kA |
| | 13A | 1,1 kA | 1,3 kA | 1,7 kA | 2 kA | 3,5 kA |
| | 16A | 1 kA | 1,2 kA | 1,5 kA | 2 kA | 3 kA |
| | 20A | 0,8 kA | 1,2 kA | 1,5 kA | 1,5 kA | 3 kA |
| | 25A | 0,7 kA | 1,2 kA | 1,5 kA | 1,5 kA | 3 kA |
| | 32A | | 1,2 kA | 1 kA | 1,5 kA | 2 kA |

| | | Power supply side: MCCB series MC1 | | | | |
|---|---|---|---|---|---|---|
| | $I_N$ | 40 A | 50 A | 63 A | 80 A | 100 A |
| Load side: MCB, series AM characteristic C | 6A | 1,2 kA | 2 kA | 2,5 kA | 3 kA | 4,5 kA a) |
| | 10A | 1,2 kA | 1,5 kA | 2 kA | 2 kA | 4 kA |
| | 13A | 1,1 kA | 1,3 kA | 1,7 kA | 2 kA | 3,5 kA |
| | 16A | 1 kA | 1,2 kA | 1,5 kA | 2 kA | 3 kA |
| | 20A | 0,8 kA | 1,2 kA | 1,5 kA | 1,5 kA | 3 kA |
| | 25A | 0,7 kA | 1,2 kA | 1,5 kA | 1,5 kA | 3 kA |
| | 32A | | 1,2 kA | 1 kA | 1,5 kA | 2 kA |

a) Selectivity limit current $I_s$ = rated breaking capacity $I_{cn}$ of the MCB

## DIMENSIONS

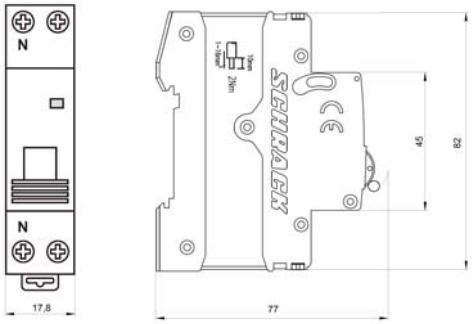


## WIRING DIAGRAM

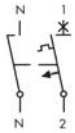


## MINIATURE CIRCUIT BREAKERS (MCB) SERIES AMPARO, 4.5 kA, 1+N ON 1MW

| DESCRIPTION | MW | PU | EAN CODE | AVAILABLE | ORDER NO. |
|---|---|---|---|---|---|
| **CHARACTERISTIC B** | | | | | |
| 6A | 1 | 12 | 9004840094138 | | **AM418506** |
| 10A | 1 | 12 | 9004840094145 | | **AM418510** |
| 13A | 1 | 12 | 9004840094237 | | **AM418513** |
| 16A | 1 | 12 | 9004840094244 | | **AM418516** |
| 20A | 1 | 12 | 9004840094251 | | **AM418520** |
| **CHARACTERISTIC C** | | | | | |
| 6A | 1 | 12 | 9004840013832 | | **AM417506** |
| 10A | 1 | 12 | 9004840013849 | | **AM417510** |
| 13A | 1 | 12 | 9004840013856 | | **AM417513** |
| 16A | 1 | 12 | 9004840013863 | | **AM417516** |
| 20A | 1 | 12 | 9004840014112 | | **AM417520** |
| 25A | 1 | 12 | 9004840014198 | | **AM417525** |
| 32A | 1 | 12 | 9004840014518 | | **AM417532** |

# COMBINED MCB/RCD (RCBO) SERIES AMPARO, 1+N

AK668610

## SCHRACK INFO

- Contact position indicator
- Terminal guide for secure connection
- Terminal cross section: 1-25 mm²
- Snap-on mounting for DIN rail EN 50 022

## TECHNICAL DATA

| | |
|---|---|
| Standards: | IEC/EN 61009-1 |
| Type | A |
| Poles | 1+N |
| Rated voltage (AC): | 230/400 V AC |
| Rated frequency (AC): | 50/60 Hz |
| Rated current $I_n$: | 6 A, 10 A, 16 A, 20 A, 25 A |
| Tripping characteristics: | B, C |
| Rated sesitivity $I_{\Delta n}$: | 0.03 A |
| Breaking time under $I_{\Delta n}$: | ≤ 0,1s |
| Rated breaking capacity: | 6 kA |
| Energy limiting class: | 3 |
| Rated residual making and breaking capacity $I_{\Delta m}$: | 500 A |
| Rated impulse withstand voltage (1,2/50) $U_{imp}$: | 6 kV |
| Dielectric test voltage at ind. freq. for 1 min.: | 2 kV |
| Insulation voltage $U_i$: | 500 A |
| Pollution degree: | 2 |
| Electrical endurance: | > 2.000 operating cycles |
| Mechanical endurance: | > 2.000 operating cycles |
| Contact position indicator: | yes |
| Protection degree: | IP 20 |
| Reference temperature: | 30°C |
| Tripping temperature: | -5 °C to +40 °C |
| Operating temperature: | -25 °C to +70 °C |
| Terminal connection type bottom: | cable / U-type busbar / pin-type busbar |
| Terminal connection type top: | cable / pin-type busbar |
| Connection: | from top and bottom |
| Terminal cross section: | 1 - 25 mm² |
| Terminal tightening torque: | 2 Nm |
| Terminal size for busbar: | 10 mm² |
| Mounting: | on DIN rail EN 60715 (35 mm) by means of fast clip device |

## TRIPPING CURVES

### B Curve

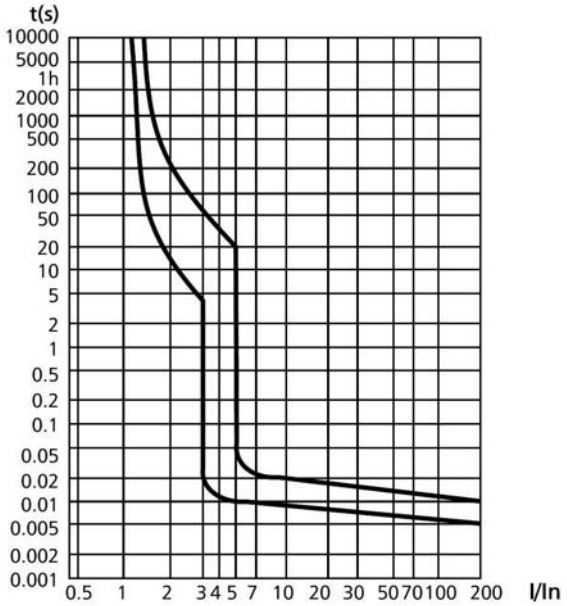


### C Curve

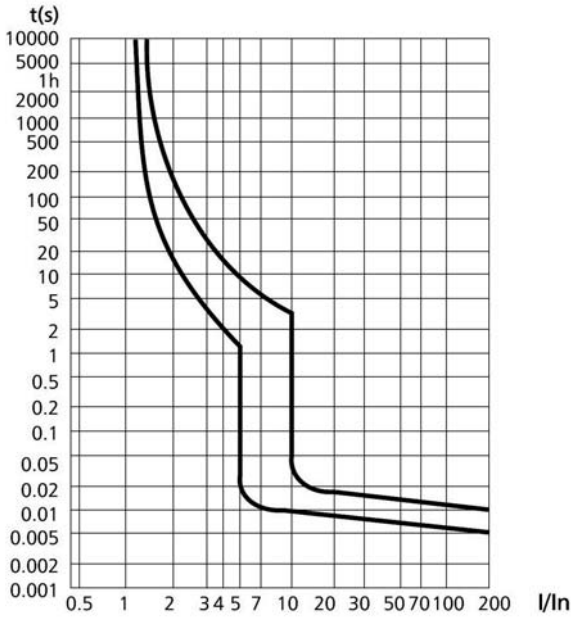


## INFLUENCE OF AMBIENT TEMPERATURE ON TRIPPING CURRENT

| | - 10°C | 0°C | 10°C | 20°C | 30°C | 40°C | 50°C | 60°C |
|---|---|---|---|---|---|---|---|---|
| 6A | 7,2 | 6,9 | 6,6 | 6,3 | 6,0 | 5,7 | 5,4 | 5,1 |
| 10A | 12,0 | 11,5 | 11,0 | 10,5 | 10,0 | 9,5 | 9,0 | 8,5 |
| 16A | 19,2 | 18,4 | 17,6 | 16,8 | 16,0 | 15,2 | 14,4 | 13,6 |
| 20A | 24,0 | 23,0 | 22,0 | 21,0 | 20,0 | 19,0 | 18,0 | 17,0 |
| 25A | 30,0 | 28,8 | 27,5 | 26,3 | 25,0 | 23,8 | 22,5 | 21,3 |

## SHORT-CUT SELECTIVITY

Selectivity to Fuses characteristic gG/gL

| | | Power supply side: fuse characteristic gG/gL | | | | | | | | |
|---|---|---|---|---|---|---|---|---|---|---|
| | $I_N$ | 20A | 25A | 36A | 50A | 63A | 80A | 100A | 125A | 160A |
| Load side: RCBO, series AMPARO characteristic B. C | 6A | 0,5 kA | 0,8 kA | 1,9 kA | 2,5 kA | 4,5 kA | 5 kA | 6 kA | 6 kA | 6 kA |
| | 10A | | 0,7 kA | 1,4 kA | 2,2 kA | 3,2 kA | 3,6 kA | 6 kA | 6 kA | 6 kA |
| | 16A | | | 1,2 kA | 1,8 kA | 2,6 kA | 3 kA | 5,6 kA | 6 kA | 6 kA |
| | 20A | | | | 1,5 kA | 2,2 kA | 2,5 kA | 4,6 kA | 6 kA | 6 kA |
| | 25A | | | | 1,3 kA | 2 kA | 2,2 kA | 4,1 kA | 5,5 kA | 6 kA |

## SHORT-CUT SELECTIVITY

Selectivity to MCCB type MC1

| | | Power supply side: MCCB series MC1 | | | | |
|---|---|---|---|---|---|---|
| | $I_N$ | 40 A | 50 A | 63 A | 80 A | 100 A |
| Load side: RCBO, series AMPARO characteristic B | 6A | 1,2 kA | 2 kA | 2,5 kA | 3 kA | 5 kA |
| | 10A | 1,2 kA | 1,5 kA | 2 kA | 2 kA | 4 kA |
| | 16A | 1 kA | 1,2 kA | 1,5 kA | 2 kA | 3 kA |
| | 20A | 0,8 kA | 1,2 kA | 1,5 kA | 1,5 kA | 3 kA |
| | 25A | 0,7 kA | 1,2 kA | 1,5 kA | 1,5 kA | 3 kA |

Selectivity to MCCB type MC1

| | | Power supply side: MCCB series MC1 | | | | |
|---|---|---|---|---|---|---|
| | $I_N$ | 40 A | 50 A | 63 A | 80 A | 100 A |
| Load side: RCBO, series AMPARO characteristic C | 6A | 1,2 kA | 2 kA | 2,5 kA | 3 kA | 5 kA |
| | 10A | 1,2 kA | 1,5 kA | 2 kA | 2 kA | 4 kA |
| | 16A | 1 kA | 1,2 kA | 1,5 kA | 2 kA | 3 kA |
| | 20A | 0,8 kA | 1,2 kA | 1,5 kA | 1,5 kA | 3 kA |
| | 25A | 0,7 kA | 1,2 kA | 1,5 kA | 1,5 kA | 3 kA |

Selectivity to MCCB type MC2

| | | Power supply side: MCCB series MC2 | | | | |
|---|---|---|---|---|---|---|
| | $I_N$ | 40 A | 50 A | 63 A | 80 A | 100 A |
| Load side: RCBO, series AMPARO characteristic B | 6A | 1,2 kA | 1,5 kA | 2,5 kA | 3 kA | 6 kA |
| | 10A | 1 kA | 1,5 kA | 2,5 kA | 3 kA | 6 kA |
| | 13A | 1 kA | 1,2 kA | 2 kA | 3 kA | 6 kA |
| | 16A | 1 kA | 1,2 kA | 1,5 kA | 2,5 kA | 6 kA |
| | 20A | 1 kA | 1,2 kA | 1,5 kA | 2 kA | 6 kA |
| | 25A | 0,8 kA | 1 kA | 1,5 kA | 2 kA | 6 kA |

| | | Power supply side: MCCB series MC2 | | | | |
|---|---|---|---|---|---|---|
| | $I_N$ | 40 A | 50 A | 63 A | 80 A | 100 A |
| Load side: RCBO, series AMPARO characteristic C | 6A | 1,2 kA | 1,5 kA | 2,5 kA | 3 kA | 6 kA |
| | 10A | 1 kA | 1,5 kA | 2,5 kA | 3 kA | 6 kA |
| | 13A | 1 kA | 1,2 kA | 2 kA | 3 kA | 6 kA |
| | 16A | 1 kA | 1,2 kA | 1,5 kA | 2,5 kA | 6 kA |
| | 20A | 1 kA | 1,2 kA | 1,5 kA | 1,5 kA | 6 kA |
| | 25A | 0,8 kA | 1 kA | 1,5 kA | 2 kA | 6 kA |

## DIMENSIONS

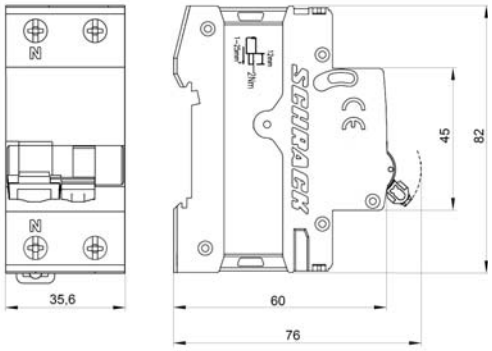


## WIRING DIAGRAM

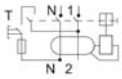


## COMBINED MCB/RCD (RCBO) SERIES AMPARO, 1+N, 6 kA, 30 mA, TYPE A

| DESCRIPTION | MW | PU | EAN CODE | AVAILABLE | ORDER NO. |
|---|---|---|---|---|---|
| **CHARACTERISTIC B** | | | | | |
| 6A | 2 | 1 | 9004840014525 | | AK668606 |
| 10A | 2 | 1 | 9004840015379 | | AK668610 |
| 13A | 2 | 1 | 9004840015386 | | AK668613 |
| 16A | 2 | 1 | 9004840015423 | | AK668616 |
| 20A | 2 | 1 | 9004840015485 | | AK668620 |
| 25A | 2 | 1 | 9004840015676 | | AK668625 |
| **CHARACTERISTIC C** | | | | | |
| 6A | 2 | 1 | 9004840017229 | | AK667606 |
| 10A | 2 | 1 | 9004840017236 | | AK667610 |
| 13A | 2 | 1 | 9004840017922 | | AK667613 |
| 16A | 2 | 1 | 9004840018127 | | AK667616 |
| 20A | 2 | 1 | 9004840018400 | | AK667620 |
| 25A | 2 | 1 | 9004840022001 | | AK667625 |

## RESIDUAL CURRENT CIRCUT BREAKER (RCCB), SERIES AMPARO

AR054203

AR054103

### SCHRACK INFO

- Tripping indicator (electr. tripping with red indication)
- Lift and clamp terminals on both sides
- Terminal guide for secure connection
- Terminal cross section: 1-25 mm²
- Snap-on mounting for DIN rail EN 50 022
- VDE-certificate

### TECHNICAL DATA

| | | |
|---|---|---|
| Standards: | | IEC/EN 61008-1 |
| Poles | | 2, 4 |
| Type | | AC, A |
| Delay-type | | G, S |
| Rated voltage (AC): | | 230/400 V AC |
| Rated frequency (AC): | | 50/60 Hz |
| Rated current $I_n$: | | 25 A, 40 A, 63 A |
| Rated sesitivity $I_{\Delta n}$: | | 0.03 A, 0.1 A, 0.3 A |
| Rated impulse withstand voltage (1,2/50) $U_{imp}$: | | 6 kV |
| Dielectric test voltage at ind. freq. for 1 min.: | | 2.5 kV |
| Insulation voltage $U_i$: | | 500 V |
| Short-circuit current $I_{nc} = I_{\Delta n}$ | | 6000/10000 A |
| Max. back-up fuse as short circuit protection (SCPD): | | |
| | 25 A | 63 A gG |
| | 40 A | 63 A gG |
| | 63 A | 63 A gG |
| Max. back-up fuse as overload protection (OCPD): | | |
| | 25 A | 16 A gG |
| | 40 A | 25 A gG |
| | 63 A | 40 A gG |
| Rated residual making and breaking capacity: | | |
| | 25 A | 500 A |
| | 40 A | 500 A |
| | 63 A | 630 A |
| Break time under $I_{\Delta n}$: | | |
| | Normal type | ≤ 0,1 |
| | G | 10 ms - 30 ms |
| | S | 150 ms - 500 ms |
| Certificate: | | VDE for type A in 2 pole version |
| Pollution degree: | | 2 |
| Electrical endurance: | | > 2.000 operating cycles |
| Mechanical endurance: | | > 2.000 operating cycles |
| Contact position indicator: | | yes |
| Protection degree: | | IP 20 |
| Ambient temperature daily average ≤ 35°C: | | -5 °C to +40 °C |
| Operating temperature: | | -25 °C to +70 °C |
| Terminal connection type: | | cable / U-type busbar / pin-type busbar |
| Connection: | | from top and bottom |
| Terminal cross section: | | 35 mm² |
| Terminal tightening torque: | | 2.5 Nm |
| Mounting: | | on DIN rail EN 60715 (35 mm) by means of fast clip device |

## DIMENSIONS

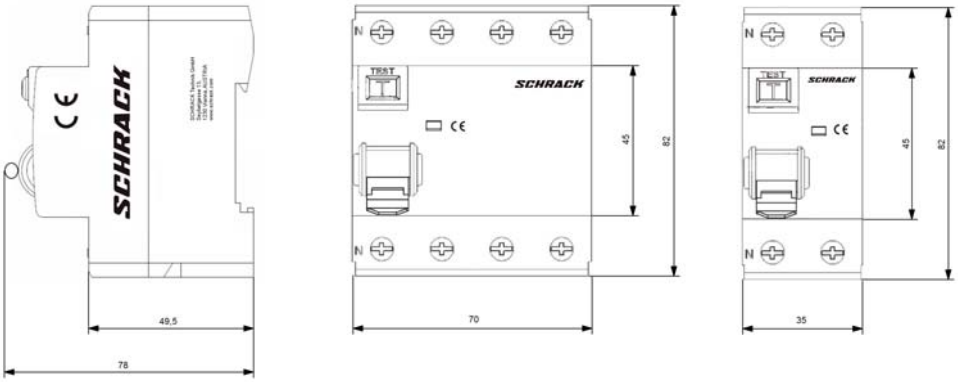


## WIRING DIAGRAM

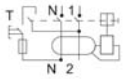


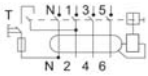

## RESIDUAL CURRENT CIRCUT BREAKER (RCCB), SERIES AMPARO 10 kA, 30 mA, TYPE A

| DESCRIPTION | MW | PU | EAN CODE | AVAILABLE | ORDER NO. |
|---|---|---|---|---|---|
| **2-POLE** | | | | | |
| 25A / 2 / 0.03A | 2 | 1 | 9004840022032 | | AR052203 |
| 40A / 2 / 0.03A | 2 | 1 | 9004840022056 | | AR054203 |
| 63A / 2 / 0.03A | 2 | 1 | 9004840022193 | | AR056203 |
| **4-POLE** | | | | | |
| 25A / 4 / 0.03A | 4 | 1 | 9004840022209 | | AR052103 |
| 40A / 4 / 0.03A | 4 | 1 | 9004840023305 | | AR054103 |
| 63A / 4 / 0.03A | 4 | 1 | 9004840023305 | | AR056103 |

## RESIDUAL CURRENT CIRCUT BREAKER (RCCB), SERIES AMPARO 10 kA, 300 mA, TYPE A

| DESCRIPTION | MW | PU | EAN CODE | AVAILABLE | ORDER NO. |
|---|---|---|---|---|---|
| **2-POLE** | | | | | |
| 40A / 2 / 0.3A | 2 | 1 | 9004840023329 | | AR054230 |
| **4-POLE** | | | | | |
| 40A / 4 / 0.3A | 4 | 1 | 9004840023336 | | AR054130 |
| 63A / 4 / 0.3A | 4 | 1 | 9004840023343 | | AR056130 |

## RESIDUAL CURRENT CIRCUT BREAKER (RCCB), SERIES AMPARO 10 kA, 30 mA, TYPE AC

| DESCRIPTION | MW | PU | EAN CODE | AVAILABLE | ORDER NO. |
|---|---|---|---|---|---|
| **2-POLE** | | | | | |
| 25A / 2 / 0.03A | 2 | 1 | 9004840023350 | | AR002203 |
| 40A / 2 / 0.03A | 2 | 1 | 9004840023374 | | AR004203 |
| 63A / 2 / 0.03A | 2 | 1 | 9004840023381 | | AR006203 |
| **4-POLE** | | | | | |
| 25A / 4 / 0.03A | 4 | 1 | 9004840023398 | | AR002103 |
| 40A / 4 / 0.03A | 4 | 1 | 9004840023411 | | AR004103 |
| 63A / 4 / 0.03A | 4 | 1 | 9004840023428 | | AR006103 |

## RESIDUAL CURRENT CIRCUT BREAKER (RCCB), SERIES AMPARO 10 kA, 100 mA, TYPE AC

| DESCRIPTION | MW | PU | EAN CODE | AVAILABLE | ORDER NO. |
|---|---|---|---|---|---|
| **2-POLE** | | | | | |
| 25A / 2 / 0.1A | 2 | 1 | 9004840023435 | | AR002210 |
| 40A / 2 / 0.1A | 2 | 1 | 9004840023459 | | AR004210 |
| 63A / 2 / 0.1A | 2 | 1 | 9004840023466 | | AR006210 |
| **4-POLE** | | | | | |
| 25A / 4 / 0.1A | 4 | 1 | 9004840023473 | | AR002110 |
| 40A / 4 / 0.1A | 4 | 1 | 9004840023497 | | AR004110 |
| 63A / 4 / 0.1A | 4 | 1 | 9004840023503 | | AR006110 |

## RESIDUAL CURRENT CIRCUT BREAKER (RCCB), SERIES AMPARO 10 kA, 300 mA, TYPE AC

| DESCRIPTION | MW | PU | EAN CODE | AVAILABLE | ORDER NO. |
|---|---|---|---|---|---|
| **2-POLE** | | | | | |
| 25A / 2 / 0.3A | 2 | 1 | 9004840023510 | | **AR002230** |
| 40A / 2 / 0.3A | 2 | 1 | 9004840023534 | | **AR004230** |
| 63A / 2 / 0.3A | 2 | 1 | 9004840023541 | | **AR006230** |
| **4-POLE** | | | | | |
| 25A / 4 / 0.3A | 4 | 1 | 9004840023558 | | **AR002130** |
| 40A / 4 / 0.3A | 4 | 1 | 9004840023572 | | **AR004130** |
| 63A / 4 / 0.3A | 4 | 1 | 9004840023589 | | **AR006130** |

## RESIDUAL CURRENT CIRCUT BREAKER (RCCB), SERIES AMPARO 10 kA, 30 mA, TYPE AC/G

| DESCRIPTION | MW | PU | EAN CODE | AVAILABLE | ORDER NO. |
|---|---|---|---|---|---|
| **2-POLE** | | | | | |
| 40A / 2 / 0.03A | 2 | 1 | 9004840023596 | | **AR024203** |
| **4-POLE** | | | | | |
| 40A / 4 / 0.03A | 4 | 1 | 9004840023602 | | **AR024103** |

## RESIDUAL CURRENT CIRCUT BREAKER (RCCB), SERIES AMPARO 10 kA, 300 mA, TYPE A/S

| DESCRIPTION | MW | PU | EAN CODE | AVAILABLE | ORDER NO. |
|---|---|---|---|---|---|
| **2-POLE** | | | | | |
| 40A / 2 / 0.3A | 2 | 1 | 9004840023619 | | **AR064230** |
| **4-POLE** | | | | | |
| 40A / 4 / 0.3A | 4 | 1 | 9004840023626 | | **AR064130** |
| 63A / 4 / 0.3A | 4 | 1 | 9004840023633 | | **AR066130** |

## BUSBARS

ONE OF THE TASKS OF BUSBARS IS THE TIME-EFFECTIVE CONNECTION OF SWITCHGEAR SYSTEMS. PROVIDING THIS TIME SAVING IN MOUNTING ELECTRICAL INSTALLATIONS HAS ALWAYS BEEN ONE OF OUR MAIN OBJECTIVES.

# FORK BUSBAR, 1-POLE, NOT POSSIBLE TO BREAK OFF

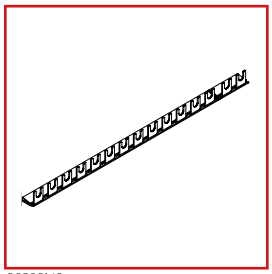

BS900140

## SCHRACK INFO

- Fork busbar for wiring of devices with: Dual-function terminal, screw terminal, screw connection, bracket terminal, flat terminal
- Pitch 17.8 mm
- 57 module widths = approximately 1 m

## DIMENSIONS

BS900140

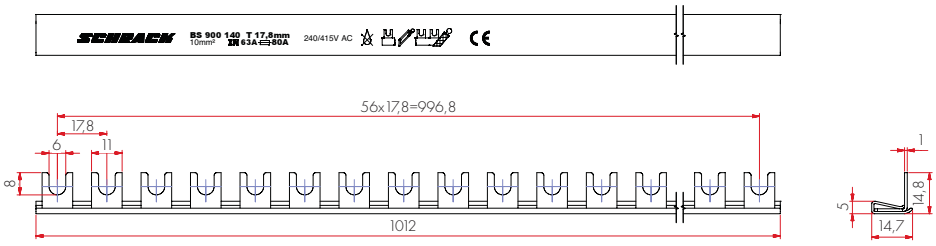


BS900141-P

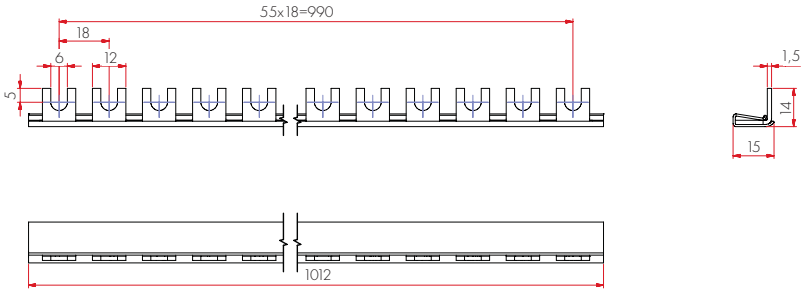


| DESCRIPTION/CROSS-SECTION | PHASES | MAX. A | MW | PU | EAN CODE | AVAILABLE | ORDER NO. |
|---|---|---|---|---|---|---|---|
| Fork busbar 10 mm² | 1 | 63/100 | 57 | 1 | 9004840083019 | | BS900140 |
| Fork busbar 16 mm² | 1 | 90/150 | 57 | 10 | 9004840106671 | | BS900141-P |

# FORK BUSBAR, 2-POLE, NOT POSSIBLE TO BREAK OFF

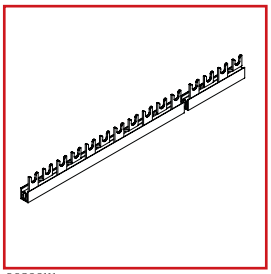

BS900111

## SCHRACK INFO

- Fork busbar for wiring of devices with: Dual-function terminal, screw terminal, screw connection, bracket terminal, flat terminal
- Pitch 17.8 mm
- 56 module widths = 28 x 2 module widths = approximately 1 m
- 28 x MCB 2-pole / MCB 1+N / 2-pole RBCO
- Phase sequence: N, L / L1, L2 / +, –

## DIMENSIONS

BS900111

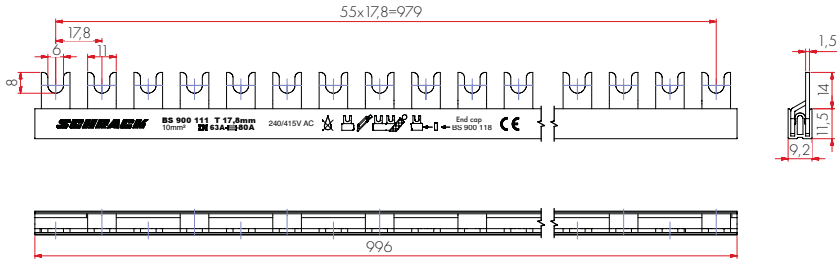


BS900112

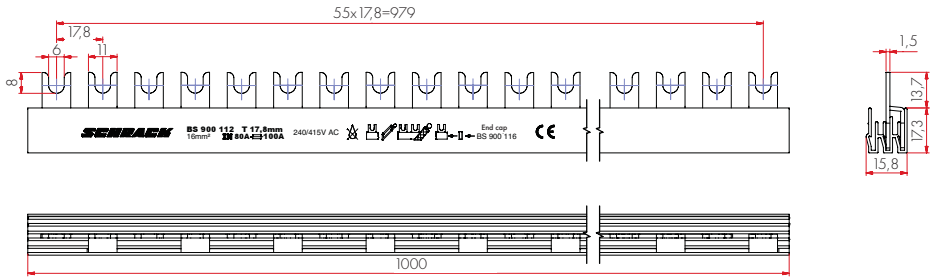


| DESCRIPTION/CROSS-SECTION | PHASE SEQUENCE | MAX. A | MW | PU | EAN CODE | AVAILABLE | ORDER NO. |
|---|---|---|---|---|---|---|---|
| Fork busbar 10 mm² | L, N or +/– | 63/100 | 56 | 10 | 9004840013429 | | **BS900111** |
| Fork busbar 16 mm² | L, N or +/– | 80/120 | 56 | 10 | 9004840013436 | | **BS900112** |

**ACCESSORIES**

| | | | | | | | |
|---|---|---|---|---|---|---|---|
| End cap for BS900111 | | | | 1 | 9004840013498 | | **BS900118** |
| End cap for BS900112 | | | | 1 | 9004840013474 | | **BS900116** |

# FORK BUSBAR, 3-POLE, POSSIBLE TO BREAK OFF

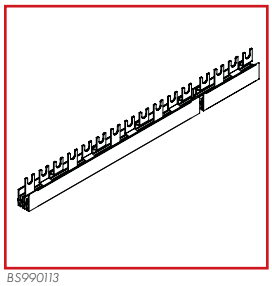

BS990113

## SCHRACK INFO

- Fork busbar for wiring of devices with: Dual-function terminal, screw terminal, screw connection, bracket terminal, flat terminal
- Pitch 17.8 mm
- 57 module widths = 19 x 3 module widths = approximately 1 m
- 19 x MCB 3-pole / 57 MCB 1-pole
- Phase sequence: L1, L2, L3, L1, L2, ... L1, L2, L3

## DIMENSIONS

BS990113

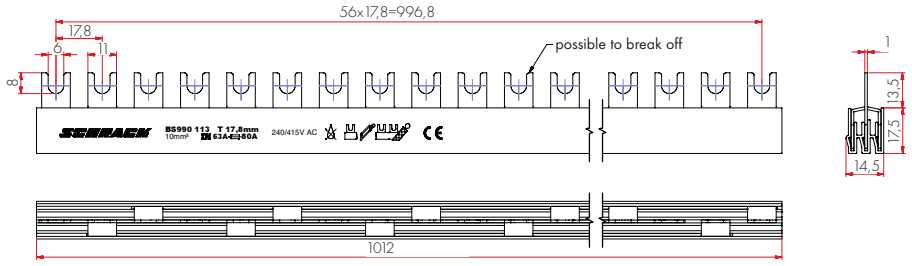


BS990114

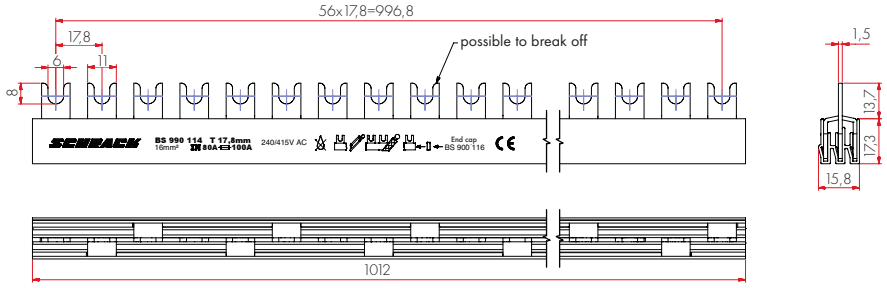


| DESCRIPTION/CROSS-SECTION | PHASE SEQUENCE | MAX. A | MW | PU | EAN CODE | AVAILABLE | ORDER NO. |
|---|---|---|---|---|---|---|---|
| Fork busbar 10 mm² | L1, L2, L3 | 63/100 | 57 | 10 | 9004840186086 | | BS990113 |
| Fork busbar 16 mm² | L1, L2, L3 | 80/120 | 57 | 10 | 9004840186093 | | BS990114 |

ACCESSORIES

| | | | | | | | |
|---|---|---|---|---|---|---|---|
| End cap, 3-pole | | | | 1 | 9004840013474 | | BS900116 |
| End cap, 4-pole, for use of additional-N busbar | | | | 1 | 9004840013481 | | BS900117 |

## N-FORK BUSBAR, 1-POLE, POSSIBLE TO BREAK OFF

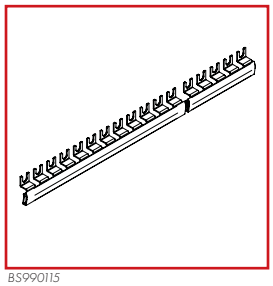

BS990115

### SCHRACK INFO

- Fork busbar for wiring of devices with: Dual-function terminal, screw terminal, screw connection, bracket terminal, flat terminal
- Pitch 17.8 mm
- 57 module widths = approximately 1 m

### DIMENSIONS

BS990115

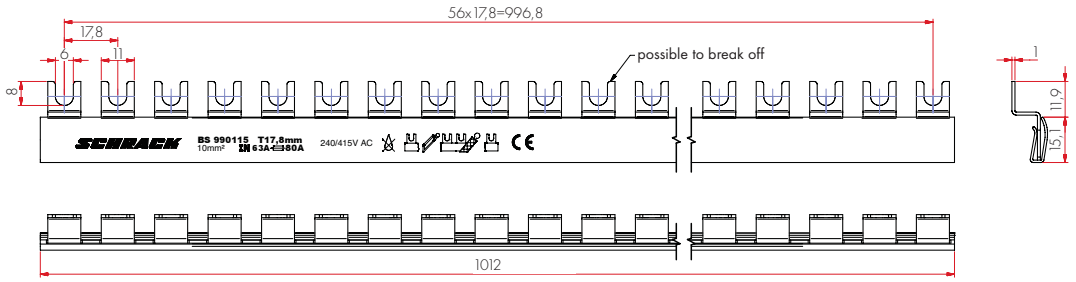


BS990127

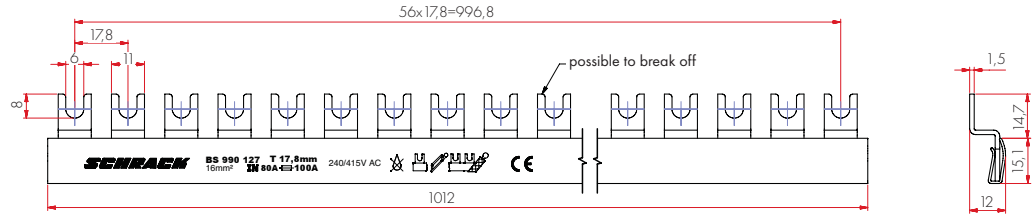


| DESCRIPTION/CROSS-SECTION | PHASE SEQUENCE | MAX. A | MW | PU | EAN CODE | AVAILABLE | ORDER NO. |
|---|---|---|---|---|---|---|---|
| N-fork busbar 10 mm² | N | 63/100 | 57 | 10 | 9004840186109 | | BS990115 |
| N-fork busbar 16 mm² | N | 80/120 | 57 | 10 | 9004840186130 | | BS990127 |

**ACCESSORIES**

| | | | | | | | |
|---|---|---|---|---|---|---|---|
| End cap, 4-pole | | | | 1 | 9004840013481 | | BS900117 |
| End cap, 1-pole, blue | | | | 1 | 9004840652437 | | BS900108 |

# FORK BUSBAR, 1 – 4-POLE, POSSIBLE TO BREAK OFF

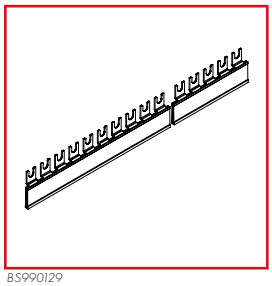

BS990129

## SCHRACK INFO

- Fork busbar for wiring of devices with: Dual-function terminal, screw terminal, screw connection, bracket terminal, flat terminal
- Pitch 17.8 mm
- 57 module widths = approximately 1 m

## DIMENSIONS

BS990129
for L1 and L3

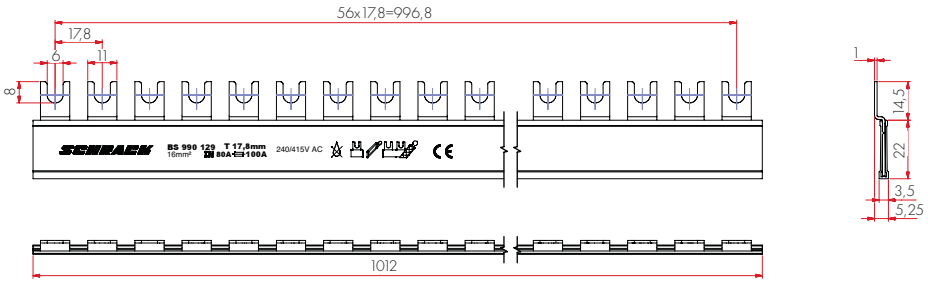


BS990130
for L2

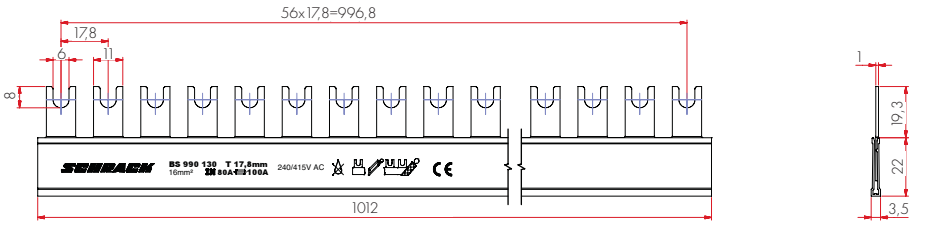


BS990131
for N

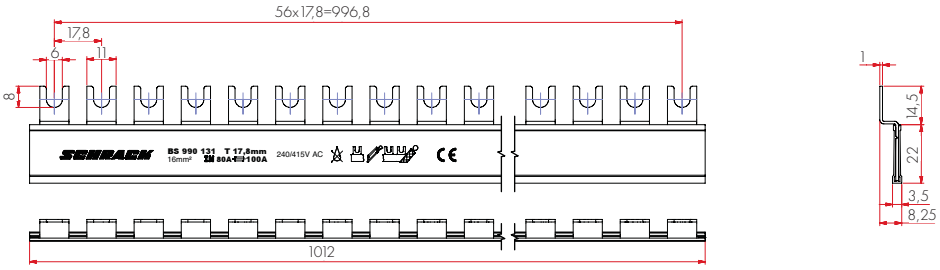


| DESCRIPTION/CROSS-SECTION | PHASE SEQUENCE | MAX. A | MW | PU | EAN CODE | AVAILABLE | ORDER NO. |
|---|---|---|---|---|---|---|---|
| Fork busbar 16 mm² | L1/3 | 80/120 | 57 | 25 | 9004840186147 | | BS990129 |
| Fork busbar 16 mm² | L2 | 80/120 | 57 | 25 | 9004840186154 | | BS990130 |
| Fork busbar 16 mm² | N | 80/120 | 57 | 25 | 9004840186161 | | BS990131 |

### ACCESSORIES

| | | | | | | | |
|---|---|---|---|---|---|---|---|
| End cap, 4-pole | | | | 1 | 9004840013481 | | BS900117 |

## FORK BUSBAR, 4-POLE, NOT POSSIBLE TO BREAK OFF

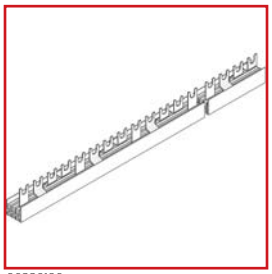

BS990125

### SCHRACK INFO

- Fork busbar for wiring of devices with: Dual-function terminal, screw terminal, screw connection, bracket terminal, flat terminal
- Pitch 17.8 mm
- 56 module widths = approximately 1 m
- 14 x RCCB 4-pole / MCB 3+N
- Phase sequence: N, L1, L2, L3, N, L1, ...

### DIMENSIONS

BS990125

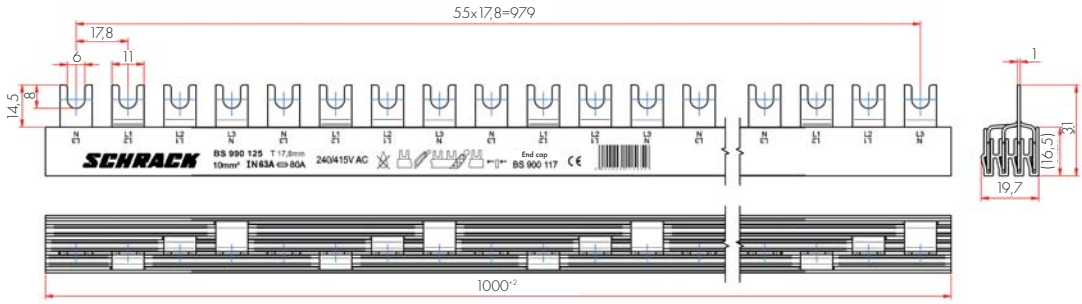


| DESCRIPTION/CROSS-SECTION | PHASE SEQUENCE | MAX. A | MW | PU | EAN CODE | AVAILABLE | ORDER NO. |
|---|---|---|---|---|---|---|---|
| Fork busbar 10 mm² | N, L1, L2, L3 | 63/100 | 56 | 10 | 9004840115659 | | BS990125 |

**ACCESSORIES**

| | | | | | | | |
|---|---|---|---|---|---|---|---|
| End cap, 4-pole | | | | 1 | 9004840013481 | | BS900117 |

# PIN BUSBAR, 1-POLE, POSSIBLE TO BREAK OFF

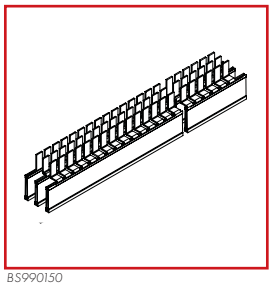

BS990150

## SCHRACK INFO

- Pin busbar for wiring of devices with: box or series terminal, clamp-type terminal
- Pitch 8.9 mm
- 112 module widths = approximately 1 m

## DIMENSIONS

BS990150

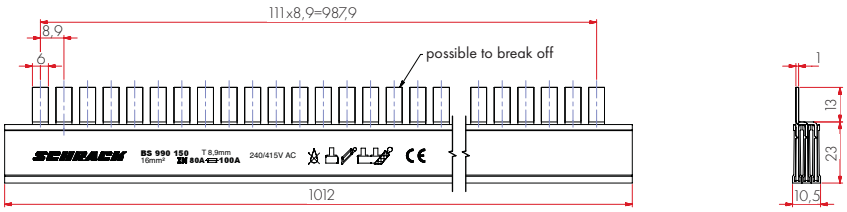


BS990151

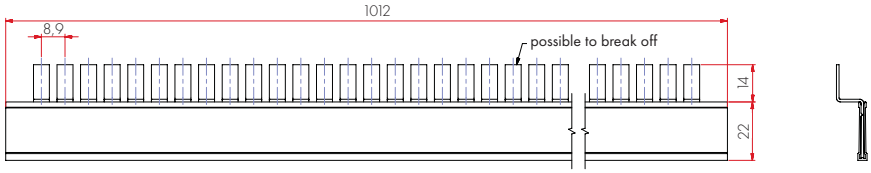


BS990152

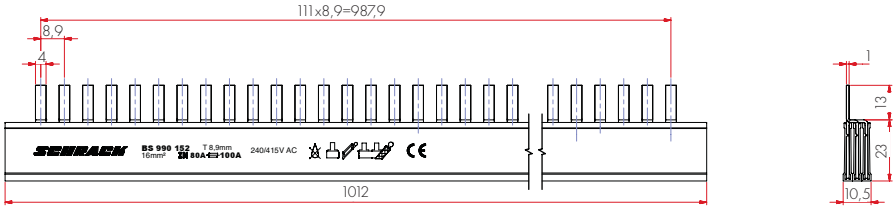


BS9901503

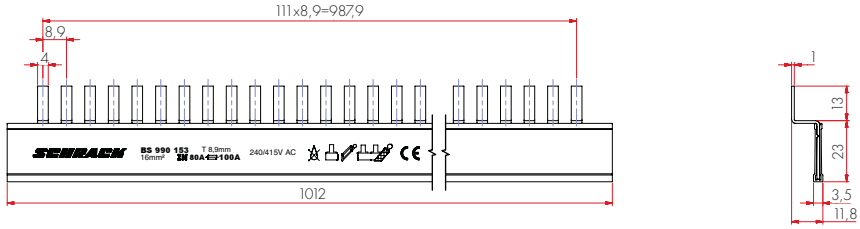


| DESCRIPTION/CROSS-SECTION | PHASES | MAX. A | MW | PU | EAN CODE | AVAILABLE | ORDER NO. |
|---|---|---|---|---|---|---|---|
| Pin busbar 10 mm² | L1, L2, L3 | 63/100 | 112 | 10 | 9004840186192 | | BS990150 |
| Pin busbar 10 mm² | N | - | 112 | 25 | 9004840186208 | | BS990151 |
| Pin busbar 16 mm² | L1, L2, L3 | 63/100 | 112 | 10 | 9004840186215 | | BS990152 |
| Pin busbar 16 mm² | N | - | 112 | 25 | 9004840186222 | | BS990153 |

ACCESSORIES

| | | | | | | | |
|---|---|---|---|---|---|---|---|
| End cap, 4-pole | | | | 1 | 9004840013481 | | BS900117 |

## PIN BUSBAR, 1-POLE, NOT POSSIBLE TO BREAK OFF

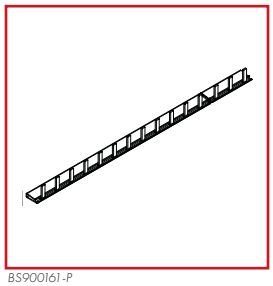

BS900161-P

### SCHRACK INFO

- Pin busbar for wiring of devices with: box or series terminal, clamp-type terminal
- Pitch 17.8 mm
- 57 module widths = approximately 1 m

### DIMENSIONS

BS900161-P

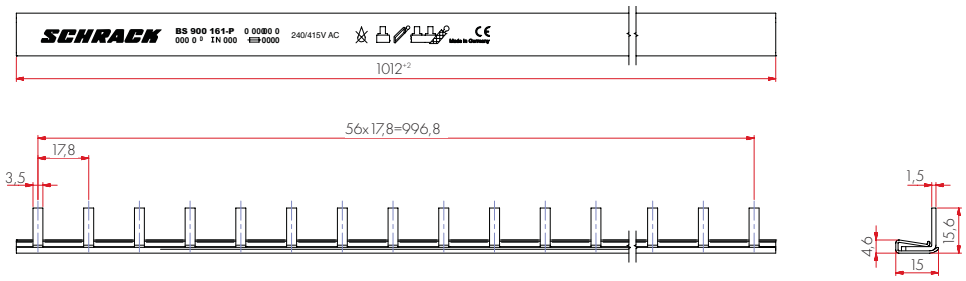


| DESCRIPTION/CROSS-SECTION | PHASES | MAX. A | MW | PU | EAN CODE | AVAILABLE | ORDER NO. |
|---|---|---|---|---|---|---|---|
| Pin busbar 16 mm² | 1 | 63/100 | 57 | 25 | 9004840106664 | | **BS900161-P** |

# PIN BUSBAR, 2-POLE, NOT POSSIBLE TO BREAK OFF

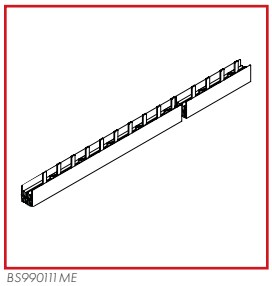

BS990111ME

## SCHRACK INFO

- Pin busbar for wiring of devices with: box or series terminal, clamp-type terminal
- Pitch 17.8 mm
- 56 module widths = approximately 1 m
- Phase sequence: L1, N or N, L1

## DIMENSIONS

BS990111ME

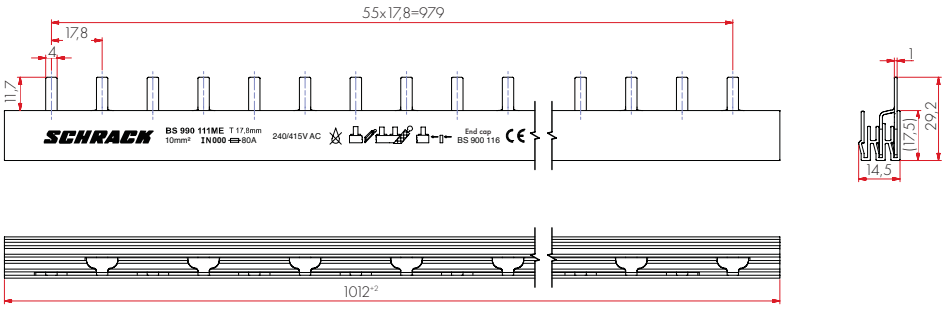


BS990112ME

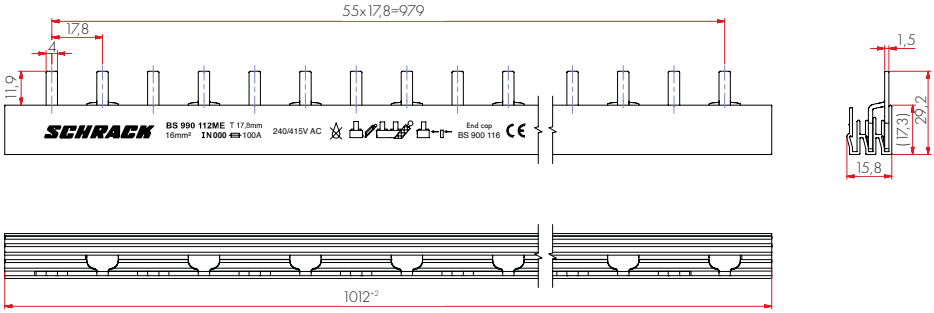


| DESCRIPTION/CROSS-SECTION | PHASE SEQUENCE | MAX. A | MW | PU | EAN CODE | AVAILABLE | ORDER NO. |
|---|---|---|---|---|---|---|---|
| Pin busbar 10 mm² | L1, N or N, L1 | 63/80 | 56 | 1 | 9004840264302 | | **BS990111ME** |
| Pin busbar 16 mm² | L1, N or N, L1 | 80/100 | 56 | 1 | 9004840264319 | | BS990112ME |

ACCESSORIES

| | | | | | | | |
|---|---|---|---|---|---|---|---|
| End cap, 3-pole | | | | 1 | 9004840013474 | | **BS900116** |

## PIN BUSBAR, 3-POLE, NOT POSSIBLE TO BREAK OFF

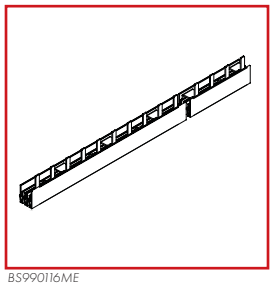

BS990116ME

### SCHRACK INFO

- Pin busbar for wiring of devices with: box or series terminal, clamp-type terminal
- Pitch 17.8 mm
- 57 module widths = approximately 1 m
- Phase sequence: L1, L2, L3, L1, L2, L3

### DIMENSIONS

BS990116ME

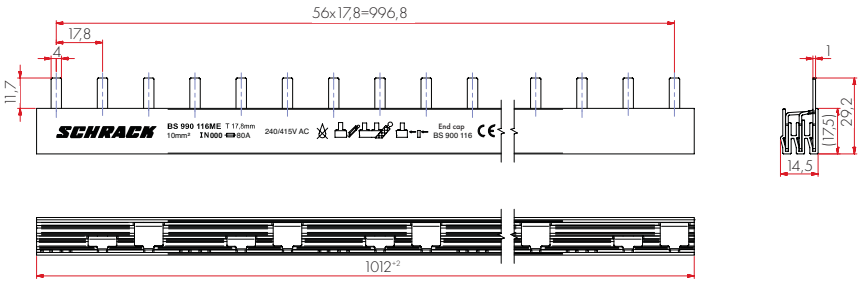


BS990117ME

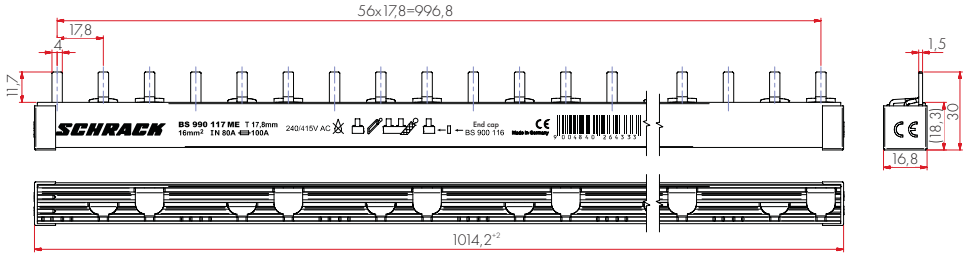


| DESCRIPTION/CROSS-SECTION | PHASE SEQUENCE | MAX. A | MW | PU | EAN CODE | AVAILABLE | ORDER NO. |
|---|---|---|---|---|---|---|---|
| Pin busbar 10 mm² | L1, L2, L3 | 63/80 | 57 | 10 | 9004840264326 | | BS990116ME |
| Pin busbar 16 mm² | L1, L2, L3 | 80/100 | 57 | 10 | 9004840264333 | | BS990117ME |

**ACCESSORIES**

| | | | | | | | |
|---|---|---|---|---|---|---|---|
| End cap, 3-pole | | | | 1 | 9004840013474 | | BS900116 |

# PIN BUSBAR, 4-POLE, NOT POSSIBLE TO BREAK OFF

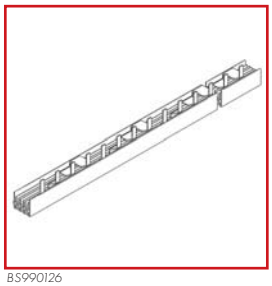

BS990126

## SCHRACK INFO

- Pin busbar for wiring of devices with: box or series terminal, clamp-type terminal
- Pitch 17.8 mm
- 54 module widths = approximately 1 m
- 14 x RCCB 4-pole / MCB 3+N
- Phase sequence: N, L1, L2, L3, N, L1, L2, L3,...

## DIMENSIONS

BS990126

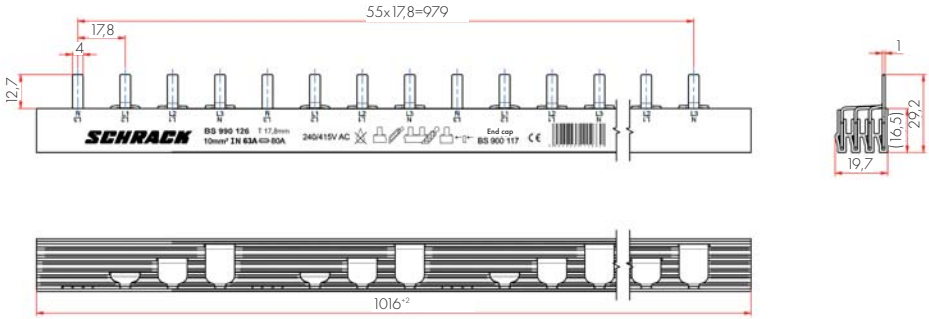


| DESCRIPTION/CROSS-SECTION | PHASE SEQUENCE | MAX. A | MW | PU | EAN CODE | AVAILABLE | ORDER NO. |
|---|---|---|---|---|---|---|---|
| Pin busbar 16 mm² | N, L1, L2, L3 | 80/100 | 54 | 10 | 9004840115680 | | **BS990126** |

**ACCESSORIES**

| | | | | | | | |
|---|---|---|---|---|---|---|---|
| End cap, 4-pole | | | | 1 | 9004840013481 | | **BS900117** |

## COMPACT BUSBAR SYSTEM


OUR BUSBAR SYSTEM IS OPTIMEZED FOR ALL AMPARO MCB, RCBO AND RCCB.

THIS IS REALIZED BY THE DOUBLE CLAMP TECHNIQUE OF AMPARO.

THE RAIL SYSTEM NOT ONLY SAVES 70% OF THE WIRING TIME AND A REDUCTION THE HEAT PRODUCTION. BUT MAINLY PROVIDES THE HIGHER SECURITY OF THE OPTIMAL CONNECTION BETWEEN THE AMPARO DEVICES.

# COMPACT FORK BUSBAR, 3-POLE, NOT POSSIBLE TO BREAK OFF, 11 MW

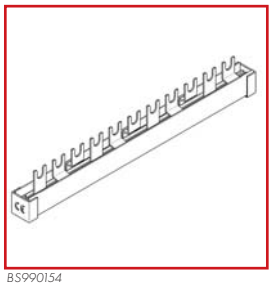

BS990154

## SCHRACK INFO

- Fork busbar for wiring of devices with: Dual-function terminal, screw terminal, screw connection, bracket terminal, flat terminal
- Pitch 17.8 mm
- 11 module widths = 188 mm
- 1 x RCCB 4-pole + 8 x MCB 1 (or 1, 2 MCB 3-pole and MCB 1-pole)
- Phase sequence: L1, L2, L3, L1, L2, L3, L1, L2, L3, L1, L2

## DIMENSIONS

BS990154

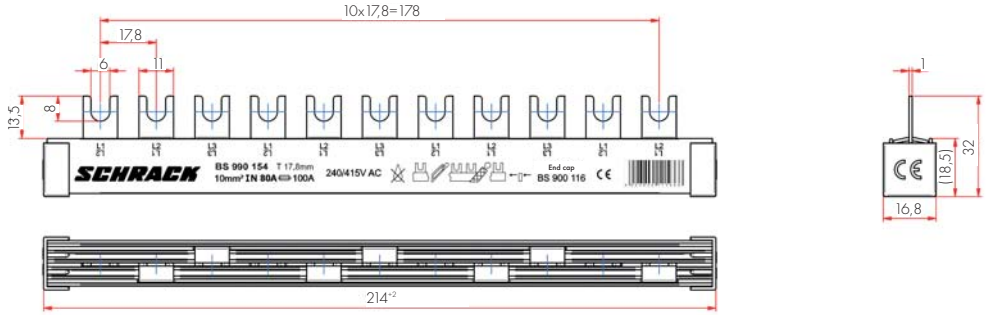


| DESCRIPTION/CROSS-SECTION | MAX. A | MW | PU | EAN CODE | AVAILABLE | ORDER NO. |
|---|---|---|---|---|---|---|
| Fork busbar 10 mm² | 63/80 | 11 | 25 | 9004840115666 | | BS990154 |

ACCESSORIES

| | | | | | | |
|---|---|---|---|---|---|---|
| End cap, 3-pole | | | 1 | 9004840013474 | | BS900116 |

# COMPACT FORK BUSBAR, 4-POLE, NOT POSSIBLE TO BREAK OFF, 12 MW

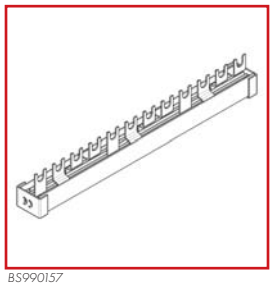

BS990157

## SCHRACK INFO

- Fork busbar for wiring of devices with: Dual-function terminal, screw terminal, screw connection, bracket terminal, flat terminal
- Pitch 17.8 mm
- 12 module widths = 214 mm
- 3 x RCCB 4-pole or 1 RCCB 4-pole and 2 x MCB 3+N
- Phase sequence: N, L1, L2, L3, N, L1, L2, L3, N, L1, L2, L3,

## DIMENSIONS

BS990157

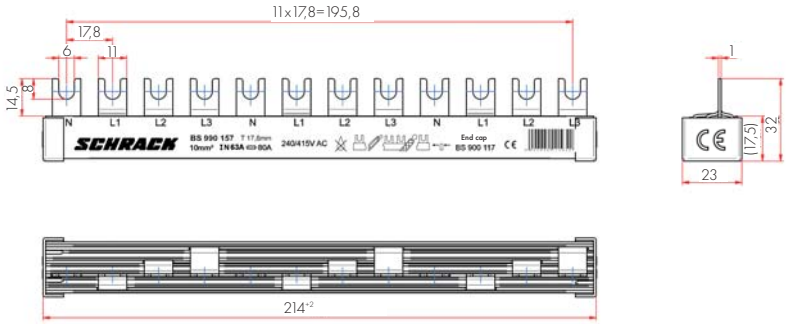


| DESCRIPTION/CROSS-SECTION | MAX. A | MW | PU | EAN CODE | AVAILABLE | ORDER NO. |
|---|---|---|---|---|---|---|
| Fork busbar 10 mm² | 63/80 | 12 | 25 | 9004840115642 | | **BS990157** |

**ACCESSORIES**

| | | | | | | |
|---|---|---|---|---|---|---|
| End cap, 4-pole | | | 1 | 9004840013481 | | **BS900117** |

# COMPACT BUSBAR FOR MINIATURE CIRCUIT BREAKERS, SLIM DESIGN, MCB 1+N ON 1 MW

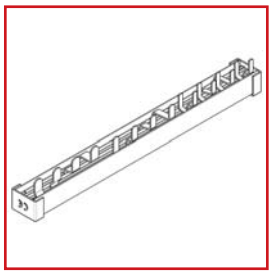

BS990158

## SCHRACK INFO

- Fork busbar for wiring of devices with: Dual-function terminal, screw terminal, screw connection, bracket terminal, flat terminal
- Pitch 17.8 mm
- 12 module widths = 217 mm
- 1 x RCCB 4-pole, 1 x MCB 3+N and 4 x MCB 1+N on 1MW
- Phase sequence: N, L1, L2, L3, N, L1, L2, L3, N, L1, N, L2, N, L3, N, L1

## DIMENSIONS

BS990158

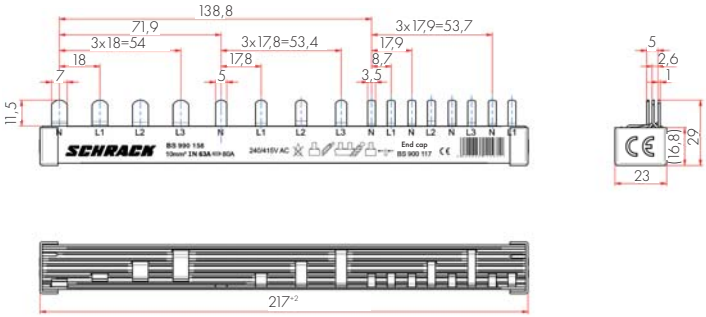


| DESCRIPTION/CROSS-SECTION | MAX. A | MW | PU | EAN CODE | AVAILABLE | ORDER NO. |
|---|---|---|---|---|---|---|
| Busbar 12 MW RCCB 4p / MCB 3+N / 4 x MCB 1N 1MW, 10 mm² / 18 + 17, 8 + 9 | 63/80 | 12 | 25 | 9004840115611 | | BS990158 |

ACCESSORIES

| | | | | | | |
|---|---|---|---|---|---|---|
| End cap, 4-pole | | | 1 | 9004840013481 | | BS900117 |

## COMPACT BUSBAR FOR MINIATURE CIRCUIT BREAKERS, SLIM DESIGN, MCB 1+N ON 1 MW

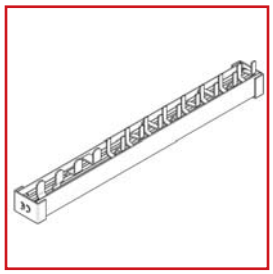

BS990159

### SCHRACK INFO

- Fork busbar for wiring of devices with: Dual-function terminal, screw terminal, screw connection, bracket terminal, flat terminal
- Pitch 17.8 mm
- 12 module widths = 217 mm
- 1 x RCCB 4-pole, 8 x MCB 1+N on 1MW
- Phase sequence: N, L1, L2, L3, N, L1, N. L2, N, L3, N, L1, N, L2, N, L3, N, L1

### DIMENSIONS

BS990159

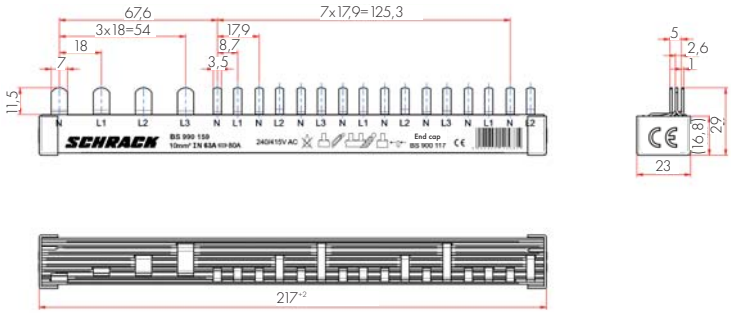


| DESCRIPTION/CROSS-SECTION | MAX. A | MW | PU | EAN CODE | AVAILABLE | ORDER NO. |
|---|---|---|---|---|---|---|
| Busbar 12 MW RCCB 4p / 8 x MCB 1N 1MW, 10 mm² / 18 + 9 | 63/80 | 12 | 25 | 9004840115635 | | BS990159 |

**ACCESSORIES**

| | | | | | | |
|---|---|---|---|---|---|---|
| End cap, 4-pole | | | 1 | 9004840013481 | | BS900117 |

## CONNECTION TERMINALS

BS900176

## DIMENSIONS

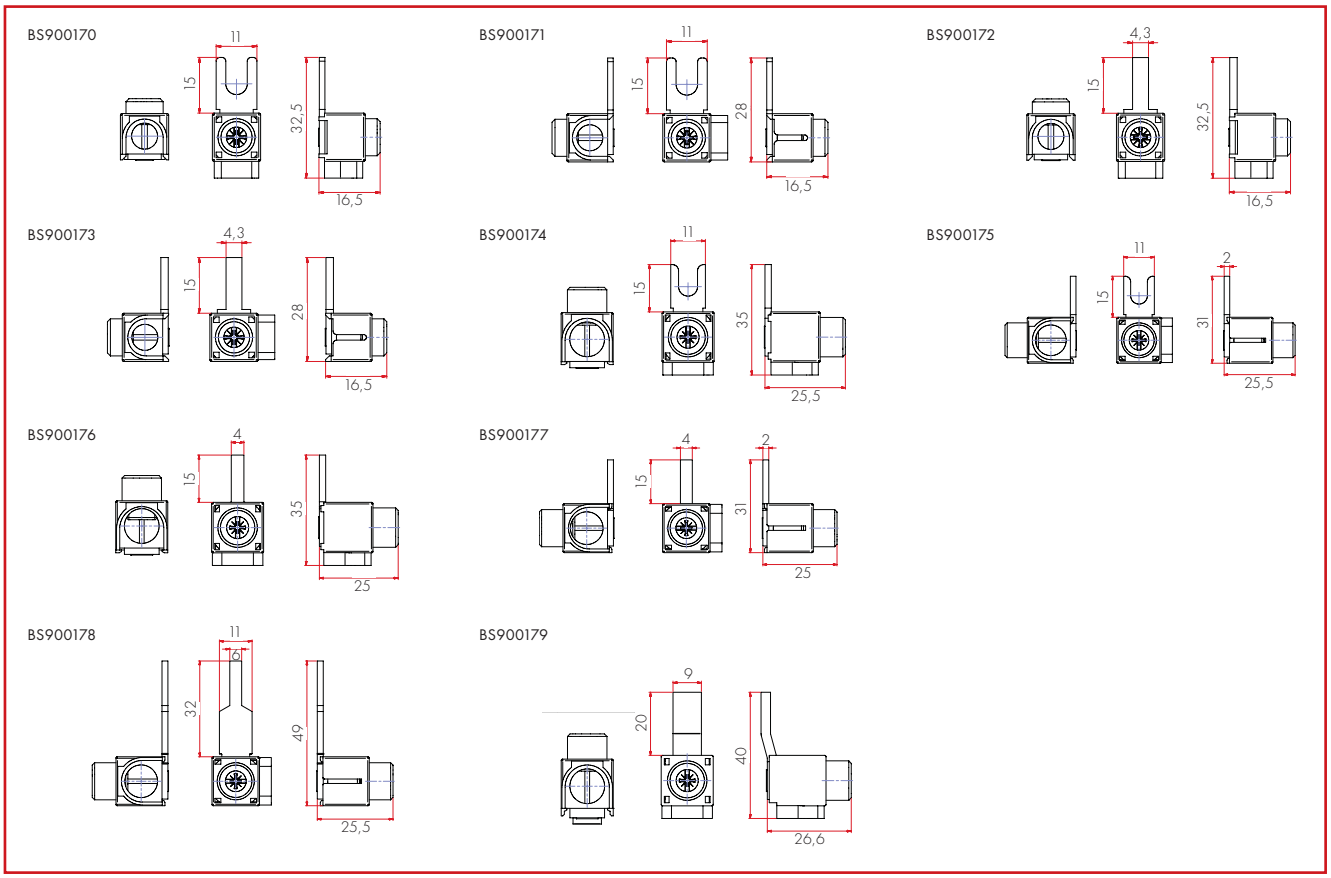


| DESCRIPTION | PU | EAN CODE | AVAILABLE | ORDER NO. |
|---|---|---|---|---|
| Fork, straight, 6-25 mm², short | 1 | 9004840084511 | | BS900170 |
| Fork, cross-wise, 6-25 mm², short | 1 | 9004840084528 | | BS900171 |
| Pin, straight, 6-25 mm², short | 1 | 9004840084535 | | BS900172 |
| Pin, cross-wise, 6-25 mm², short | 1 | 9004840084542 | | BS900173 |
| Pin, cross-wise, 6-25 mm², long | 1 | 9004840106961 | | BS900178 |
| Pin, straight 25 mm²/2 screws without insulation | 1 | 9004840021851 | | IK020019 |
| Fork, straight, 50 mm², short | 1 | 9004840084559 | | BS900174 |
| Fork, cross-wise, 50 mm², short | 1 | 9004840084566 | | BS900175 |
| Pin, straight, 50 mm², short | 1 | 9004840084573 | | BS900176 |
| Pin, cross-wise, 50 mm², short | 1 | 9004840084580 | | BS900177 |
| Pin, cross-wise, 50 mm² | 1 | 9004840166934 | | BS900199 |
| Pin, straight, 50 mm² Tytan feed terminal | 1 | 9004840146691 | | BS900179 |

## CABLE BRIDGES

KB002506

### SCHRACK INFO

- Pre-assembled cables with multicore cable end or cable lug
- Flexible, partially inherently stable
- Cross-sections: 6, 10 mm²
- On request manufactured according to customer requirements

| DESCRIPTION | LENGTH (mm) | PU | CU WT. (g) | EAN CODE | AVAILABLE | ORDER NO. |
|---|---|---|---|---|---|---|
| Green/yellow, 4 mm² | 200 | 1 | 65 | 9004840072891 | | KB012004-G |
| Insulated wire, multicore cable end at either end 12 mm, blue, 10 mm² | 250 | 1 | 26 | 9004840072822 | | KB002510-B |
| Insulated wire, multicore cable end at either end 12 mm, black, 10 mm² | 250 | 1 | 26 | 9004840072655 | | KB002510 |
| Insulated wire, multicore cable end at either end 12 mm, blue, 6 mm² | 250 | 1 | 16 | 9004840072648 | | KB002506-B |
| Insulated wire, multicore cable end at either end 12 mm, black, 6 mm² | 250 | 1 | 16 | 9004840072631 | | KB002506 |

# AUXILIARY CONTACT SERIES AMPARO, 1CO, 240V-AC, 6A, SNAP-ON

AM900099

## SCHRACK INFO

- For MCB and RCBO series AMPARO
- Indication of contact-position
- To be mounted on the left side
- Snap on mounting

## DIMENSIONS

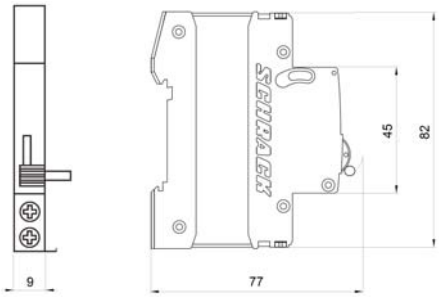


## WIRING DIAGRAM

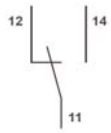


## MOUNTING

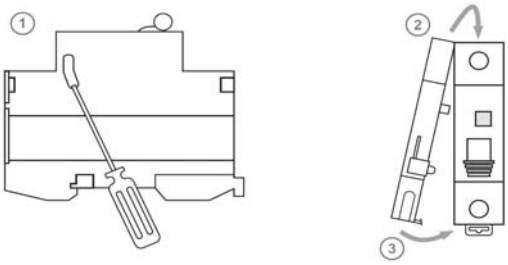


## TECHNICAL DATA

| | | |
|---|---|---|
| Standards: | | IEC/EN 60947-5-1 |
| Contact: | | 1CO |
| Rated current $I_n$: | | |
| $U_N$: | 240V-AC (50/60Hz) | 6A |
| | 415V-AC (50/60Hz) | 3A |
| | 24V-DC | 6A |
| | 48V-DC | 2A |
| | 130V-DC | 1A |
| Insulation voltage $U_i$: | | 500V |
| Rated impulse withstand voltage (1,2/50) $U_{imp}$: | | 4kV |
| Dielectric test voltage at ind. freq. for 1 min.: | | 2kV |
| Pollution degree: | | 2 |
| Electrical endurance: | | > 6.000 operating cycles |
| Mechanical endurance: | | > 10.000 operating cycles |
| Protection degree: | | IP 20 |
| Ambient temperature: | | - 5 °C to +40 °C (with daily average ≤35°C) |
| Storage temperature: | | - 25 °C to +70 °C |
| Terminal connection type: | | cable |
| Terminal cross-section: | | 1 – 2,5mm² |
| Terminal tightening torque: | | 0,8Nm |
| Mounting: | | snap on mounting on the left side |

| DESCRIPTION | EAN CODE | AVAILABLE | ORDER NO. |
|---|---|---|---|
| Auxiliary Contact, AMPARO, 1CO, 240V-AC, 6A, snap-on | 9004840025972 | | AM900099 |

## CONSUMER ENCLOSURES FLUSH-MOUNTED AND HOLLOW WALL WITH STEEL DOOR, SERIES AMPARO

### SCHRACK INFO

Flush mounted consumer enclosures according to IEC 60670-24, incl. PE- and N-terminals, with metal frame and door.

Two different types available:

- brick walls
- hollow wall

### TECHNICAL DATA

| | | |
|---|---|---|
| Material: | | ABS |
| Door: | | Metal |
| Protection: | | IP 40 |
| Glow wire test: | Brick Wall | 650°C |
| | Hollow Wall | 850°C |
| Halogen free: | | Yes |
| Protection class: | | Double insulated |
| Rated voltage: | | 400 VAC, $I_n$ 63A |
| Environmental temperature: | | -25°C to +65°C |
| Colour: | | RAL 9003 |

### DIMENSIONS

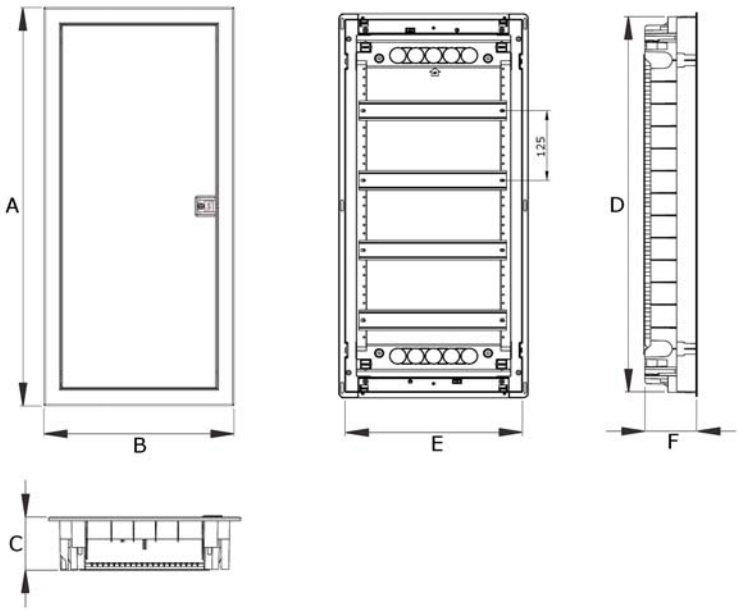


| article number | A [mm] | B [mm] | C [mm] | D [mm] | E [mm] | F [mm] | rows | Units | Neutral bar [mm²] | Earthing bar [mm²] |
|---|---|---|---|---|---|---|---|---|---|---|
| BK085001 | 317 | 346 | 96 | 274 | 306 | 88 | 1 | 12+2 | 10x10 | 10x10 |
| BK085002 | 442 | 346 | 96 | 399 | 306 | 88 | 2 | 24+4 | 30x10 | 30x10 |
| BK085003 | 592 | 346 | 96 | 549 | 306 | 88 | 3 | 36+6 | 30x10 | 30x10 |
| BK085004 | 717 | 346 | 96 | 673 | 306 | 88 | 4 | 48+8 | 30x10 | 30x10 |
| BK085051 | 317 | 346 | 96 | 273 | 306 | 88 | 1 | 12+2 | 10x10 | 10x10 |
| BK085052 | 442 | 346 | 96 | 399 | 306 | 88 | 2 | 24+4 | 30x10 | 30x10 |
| BK085053 | 592 | 346 | 96 | 549 | 306 | 88 | 3 | 36+6 | 30x10 | 30x10 |
| BK085054 | 717 | 346 | 96 | 673 | 306 | 88 | 4 | 48+8 | 30x10 | 30x10 |

## MOUNTING

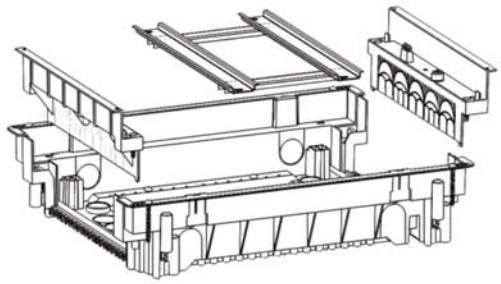

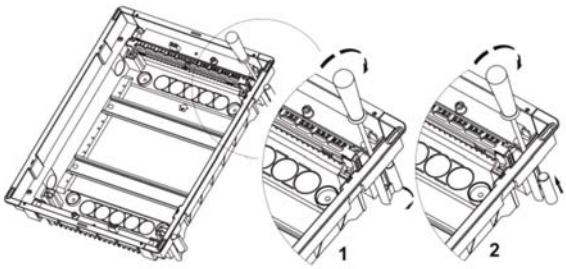


| DESCRIPTION | EAN CODE | AVAILABLE | ORDER NO. |
|---|---|---|---|
| **BRICK WALL - Glow wire test 650°C** | | | |
| 1-row, 12/14 MW | 9004840116366 | | **BK085001** |
| 2-rows, 24/28 MW | 9004840116373 | | **BK085002** |
| 3-rows, 36/42 MW | 9004840116380 | | **BK085003** |
| 4-rows, 48/56 MW | 9004840116397 | | **BK085004** |
| **HOLLOW WALL - Glow wire test 850°C** | | | |
| 1-row, 12/14 MW | 9004840116403 | | **BK085051** |
| 2-rows, 24/28 MW | 9004840116410 | | **BK085052** |
| 3-rows, 36/42 MW | 9004840116427 | | **BK085053** |
| 4-rows, 48/56 MW | 9004840116434 | | **BK085054** |

## ACCESSORIES

| DESCRIPTION | EAN CODE | AVAILABLE | ORDER NO. |
|---|---|---|---|
| Blind cover plain 1000 x 50 x 8 mm | 9004840037531 | | **IL900251** |
| Blind cover white 1000 x 50 x 8 mm | 9004840509564 | | **IL900251-W** |
| Blind cover ribbed (12MW) white | 9004840633054 | | **BK004101** |

## FLUSH MOUNTED DISTRIBUTION BOARD IP 40, SERIES TOPO

### SCHRACK INFO

Flush mounted distribution board according to ÖVE/ÖNORM EN 60670-1:2005-12-01, IEC 60670-24, incl. PE- and N-terminals, with transparent or fully plastic door.

### TECHNICAL DATA

| | |
|---|---|
| Material: | ABS |
| Protection: | IP 40 |
| Protection class: | II |
| Rated voltage: | 400 VAC |
| Environmental temperature: | -20°C to +70°C |
| Penetration into wall: | 68 - 70 mm |
| Colour: | RAL 9010 |

### DIMENSIONS

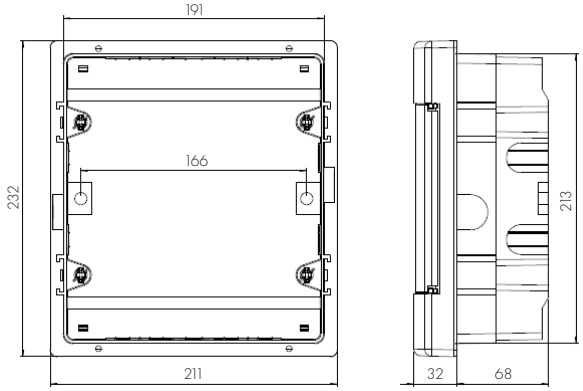


BK080000/50

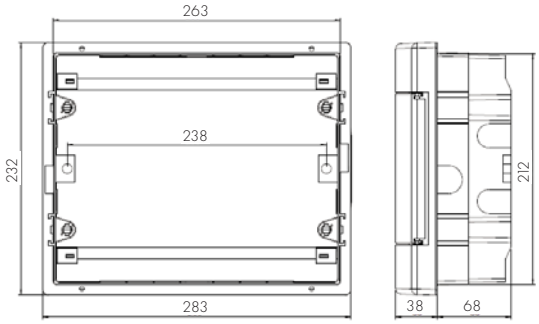


BK080001/51

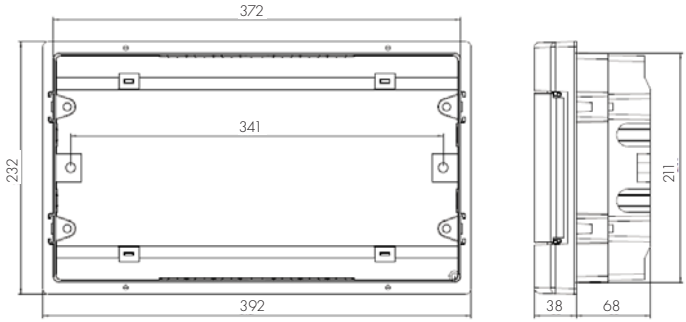


BK080004/54

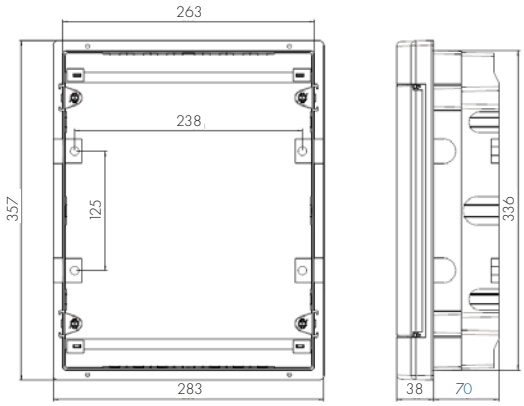


BK080002/52

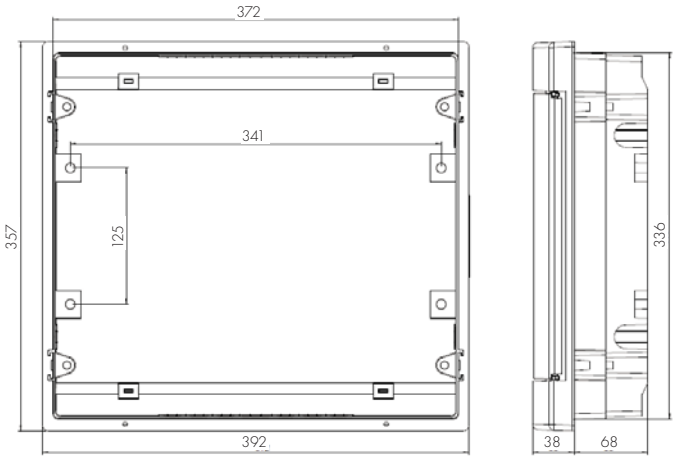


BK080006/56

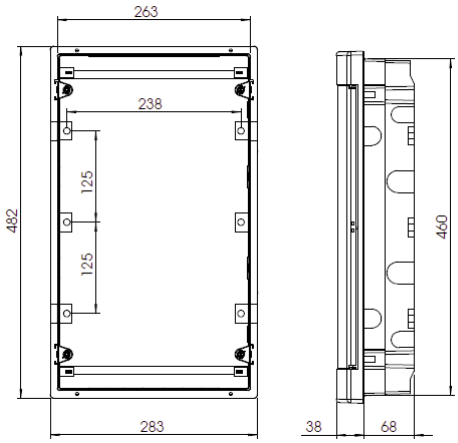


BK080003/53

| DESCRIPTION | WxHxD (mm) | EAN CODE | AVAILABLE | ORDER NO. |
|---|---|---|---|---|
| **Wall mounted with transparent door** | | | | |
| 4MW - 1-row | 211x232x110 | 9004840000047 | | BK080000 |
| 12MW - 1-row | 283x232x110 | 9004840466768 | | BK080001 |
| 18MW - 1-row | 392x232x110 | 9004840590579 | | BK080004 |
| 24MW - 2-rows | 283x357x110 | 9004840466775 | | BK080002 |
| 36MW - 2-rows | 396x357x110 | 9004840669114 | | BK080006 |
| 36MW - 3-rows | 283x482x110 | 9004840466782 | | BK080003 |
| 54MW - 3-rows | 392x522x110 | 9004840782127 | | BK080007 |

| | | | | |
|---|---|---|---|---|
| **Wall mounted with full plastic door** | | | | |
| 4MW - 1-row | 211x232x110 | 9004840521306 | | BK080050 |
| 12MW - 1-row | 283x232x110 | 9004840493320 | | BK080051 |
| 18MW - 1-row | 392x232x110 | 9004840614916 | | BK080054 |
| 24MW - 2-rows | 283x357x110 | 9004840493337 | | BK080052 |
| 36MW - 2-rows | 396x357x110 | 9004840669121 | | BK080056 |
| 36MW - 3-rows | 283x482x110 | 9004840493344 | | BK080053 |
| 54MW - 3-rows | 392x522x110 | 9004840782134 | | BK080057 |

## ACCESSORIES

| DESCRIPTION | EAN CODE | AVAILABLE | ORDER NO. |
|---|---|---|---|
| Blind cover plain 1000 x 50 x 8 mm | 9004840037531 | | IL900251 |
| Blind cover white 1000 x 50 x 8 mm | 9004840509564 | | IL900251-W |
| Blind cover ribbed (12MW) white | 9004840633054 | | BK004101 |

## WALL MOUNTED DISTRIBUTION BOARD IP 40, SERIES TOPO

### SCHRACK INFO

Wall mounted distribution board according to ÖVE/ÖNORM EN 60670-1:2005-12-01, IEC 60670-24, incl. PE- and N-terminals, with transparent or full plastic door.

### TECHNICAL DATA

| | |
|---|---|
| Material: | ABS |
| Protection: | IP 40 |
| Protection class: | II |
| Rated voltage: | 400 VAC |
| Environmental temperature: | -20°C to +70°C |
| Colour: | RAL 9010 |

### DIMENSIONS

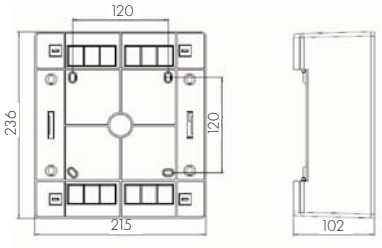


BK080100/150

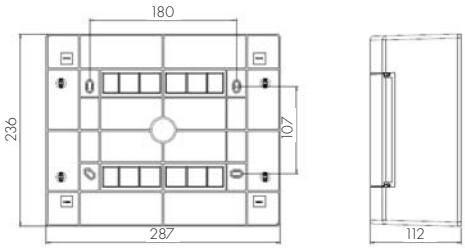


BK080101/151

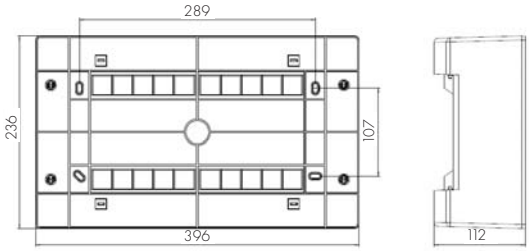


BK080104/154

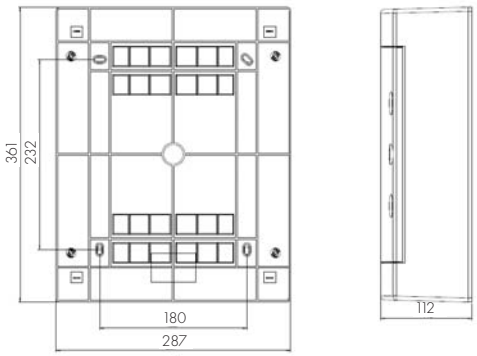


BK080102/152

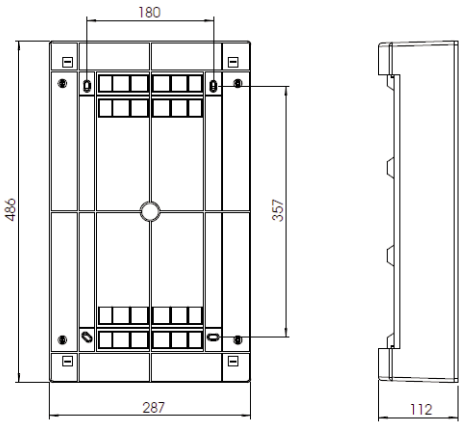


BK080103/153

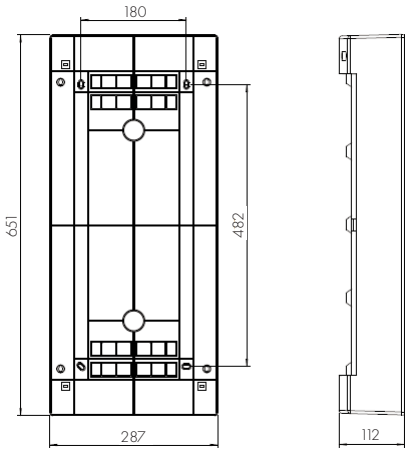


BK080105/155

| DESCRIPTION | WxHxD (mm) | EAN CODE | AVAILABLE | ORDER NO. |
|---|---|---|---|---|
| **Wall mounted with transparent door** | | | | |
| 4MW - 1-row | 215x263x112 | 9004840521313 | | BK080100 |
| 8MW - 1-row | 287x236x112 | 9004840466720 | | BK080101 |
| 18MW - 1-row | 396x236x112 | 9004840527407 | | BK080104 |
| 24MW - 2-rows | 287x361x112 | 9004840466737 | | BK080102 |
| 36MW - 2-rows | 396x361x112 | 9004840668018 | | BK080106 |
| 36MW - 3-rows | 287x482x112 | 9004840466751 | | BK080103 |
| 48MW - 4-rows | 287x651x112 | 9004840614923 | | BK080105 |
| 54MW - 3-rows | 396x526x112 | 9004840782141 | | BK080107 |
| **Wall mounted with full plastic door** | | | | |
| 4MW - 1-row | 215x263x112 | 9004840521320 | | BK080150 |
| 8MW - 1-row | 287x236x112 | 9004840493351 | | BK080151 |
| 18MW - 1-row | 396x236x112 | 9004840527391 | | BK080154 |
| 24MW - 2-rows | 287x361x112 | 9004840493368 | | BK080152 |
| 36MW - 2-rows | 396x361x112 | 9004840668025 | | BK080156 |
| 36MW - 3-rows | 287x482x112 | 9004840493375 | | BK080153 |
| 48MW - 4-rows | 287x651x112 | 9004840614930 | | BK080155 |
| 54MW - 3-rows | 396x526x112 | 9004840782158 | | BK080157 |

## ACCESSORIES

| DESCRIPTION | EAN CODE | AVAILABLE | ORDER NO. |
|---|---|---|---|
| Half-cylinder lock | 9004840521443 | | BK080099 |
| Half-cylinder lock, Metal | 9004840615005 | | BK080096 |
| Terminal support 2x8 | 9004840588279 | | BK080097 |
| Terminal support 2x15 | 9004840537215 | | BK080098 |
| Blind cover plain 1000 x 50 x 8 mm | 9004840037531 | | IL900251 |
| Blind cover white 1000 x 50 x 8 mm | 9004840509564 | | IL900251-W |
| Blind cover ribbed (12MW) white | 9004840633054 | | BK004101 |

## WALL MOUNTED DISTRIBUTION BOARD IP 65

### SCHRACK INFO

Wall mounted distribution board according to ÖVE/ÖNORM EN 60670-1:2005-12-01, IEC 60670-24, incl. PE- and N-terminals, with transparent door.

### TECHNICAL DATA

| | |
|---|---|
| Material: | ABS |
| Protection: | IP 65 |
| Protection Class: | II |
| Rated Voltage: | 400 VAC |
| Colour: | RAL 7035 |

### DIMENSIONS

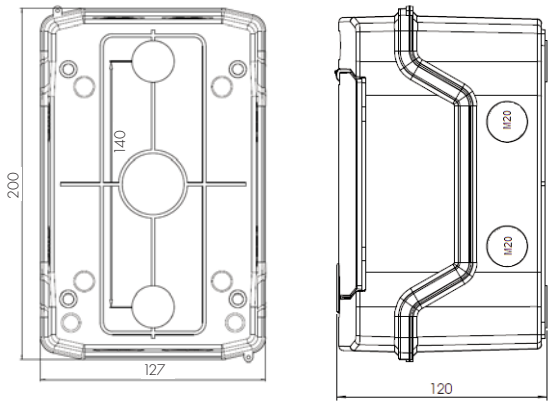


BK080200

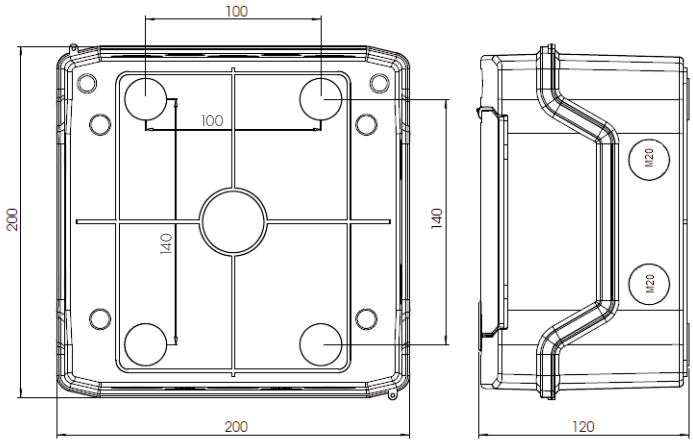


BK080201

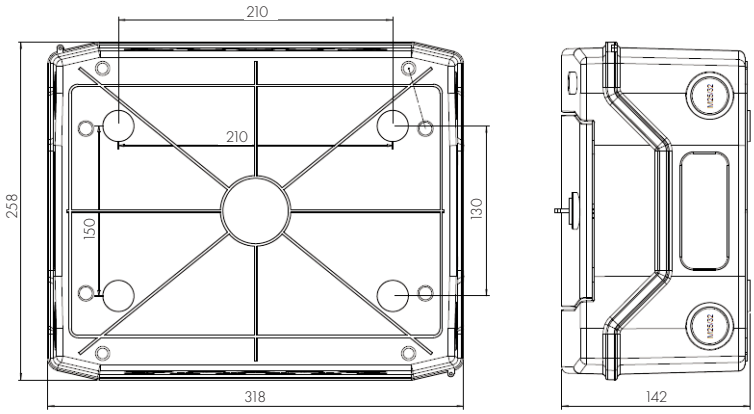


BK080202

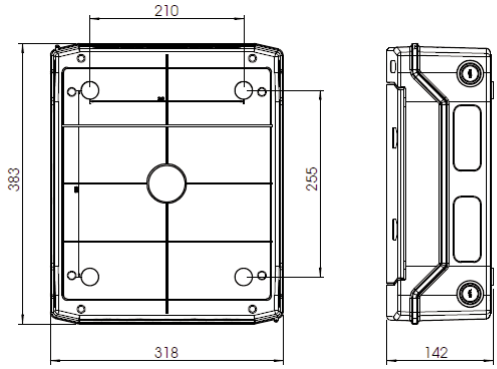


BK080203

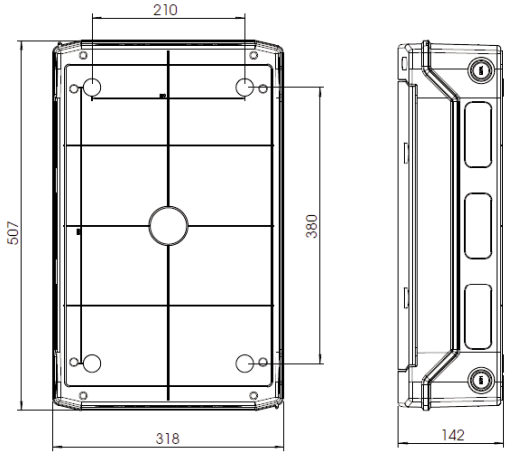


BK080204

KNOCKOUTS

| ART.NR. | TOP | BOTTOM | LEFT | RIGHT |
|---|---|---|---|---|
| BK080200 | 2xM25/32 | 2xM25/32 | 2xM20 | 2xM20 |
| BK080201 | 3xM25/32; 2xM20 | 3xM25/32; 2xM20 | 2xM20 | 2xM20 |
| BK080202 | 2xM32/40; 3xM25/32; 6xM20 | 2xM32/40; 3xM25/32; 6xM20 | 2xM25/32 | 2xM25/32 |
| BK080203 | 2xM32/40; 3xM25/32; 6xM20 | 2xM32/40; 3xM25/32; 6xM20 | 2xM25/32 | 2xM25/32 |
| BK080204 | 2xM32/40; 3xM25/32; 6xM20 | 2xM32/40; 3xM25/32; 6xM20 | 2xM25/32 | 2xM25/32 |

| DESCRIPTION | WxHxD (mm) | EAN CODE | AVAILABLE | ORDER NO. |
|---|---|---|---|---|
| 4MW - 1-row | 127x200x120 | 9004840614947 | | BK080200 |
| 8MW - 1-row | 200x200x120 | 9004840614954 | | BK080201 |
| 12MW - 1-row | 318x258x142 | 9004840614961 | | BK080202 |
| 24MW - 2-rows | 318x383x142 | 9004840614978 | | BK080203 |
| 36MW - 3-rows | 318x507x142 | 9004840614985 | | BK080204 |

## ACCESSORIES

| DESCRIPTION | EAN CODE | AVAILABLE | ORDER NO. |
|---|---|---|---|
| Half-cylinder lock, IP 65 | 9004840614992 | | BK080095 |

*People follow trends. Therefore, our technical solutions keep up with new developments, showing that we have our finger on the pulse of the times.*

# CONTROL- AND SIGNALING DEVICES, ACCESSORIES, DIN RAIL MOUNTING

## CONTENTS

## ON-OFF SWITCH, SERIES A, 40 A, 63 A

BM900011/BM900012/BM900013/BM900018

## SCHRACK INFO

- Design complies with IEC/EN 60 947-, -3
- Finger and hand touch safe VBG 4, ÖVE-EN 6
- Mounting system: Special snap-on mounting for DIN rail EN 50 022
- Contact position indicator with coloured (red/green) window

## TECHNICAL DATA

| | |
|---|---|
| Rated voltage/frequency: | 230/400 V AC, 50/60 Hz |
| Rated insulation voltage $U_{i:}$ | 440 V AC |
| Rated surge voltage $U_{imp:}$ | 4 kV (1.2/50 µs) |
| Terminal cross section: | 1-25 $mm^2$ |
| Terminal screws: | M5 (Pozidriv) |
| Terminal tightening torque: | max. 2.4 Nm |

## DIMENSIONS

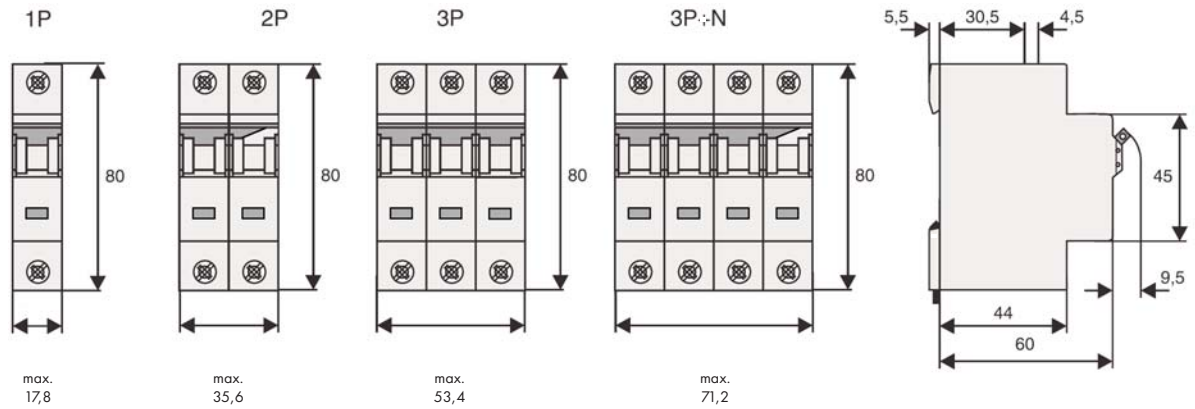


| RATED CURRENT/NO. POLES | MW | PU | TYPE | EAN CODE | AVAILABLE | ORDER NO. |
|---|---|---|---|---|---|---|
| 40 A/1-pole | 1 | 12 | A 40/1 | 9004840403114 | | **BM900011** |
| 40 A/2-pole | 2 | 6 | A 40/2 | 9004840403121 | | **BM900012** |
| 40 A/3-pole | 3 | 4 | A 40/3 | 9004840403138 | | **BM900013** |
| 40 A/3+N-pole | 4 | 3 | A 40/3N | 9004840403183 | | **BM900018** |
| 63 A/1-pole | 1 | 12 | A 63/1 | 9004840403145 | | **BM900014** |
| 63 A/2-pole | 2 | 6 | A 63/2 | 9004840403152 | | **BM900015** |
| 63 A/3-pole | 3 | 4 | A 63/3 | 9004840403169 | | **BM900016** |
| 63 A/3+N-pole | 4 | 3 | A 63/3N | 9004840403176 | | **BM900019** |

# MAIN LOAD-BREAK SWITCH – DISCONNECTOR SERIES AMPARO

AZ200243

## SCHRACK INFO

- Fulfill the requirements of the isolating function in open position
- VDE-certificate
- Terminal cross section: 1-35mm²
- Snap-on mounting for DIN rail EN 50 022

## TECHNICAL DATA

| | |
|---|---|
| Standards: | IEC/EN 60947-3 |
| Rated voltage (AC): | 230/400-240/415 |
| Rated frequency (AC): | 50/60 Hz |
| Rated current $I_e$: | 32 A, 64 A, 100 A, 125 A |
| Rated short-time withstand current $I_{cw}$: | 12 $I_e$, 1s |
| Rated making and breaking capacity: | 3 $I_e$, 1,05 $U_e$, cos ϕ 0,65 |
| Rated short circuit making capacity: | 20 $I_e$, t = 0,1s |
| Utilization category: | AC-22A |
| Rated breaking capacity: | 6 kA acc. to IEC/EN 60898,<br>6 kA acc. to IEC/EN 60947-2 |
| Energy limiting class: | 3 |
| Rated impulse withstand voltage (1,2/50) $U_{imp}$: | 4 kV |
| Dielectric test voltage at ind. freq. for 5 s.: | 2 kV |
| Insulation voltage $U_i$: | 500 V |
| Pollution degree: | 2 |
| Electrical endurance: | > 1.500 operating cycles |
| Mechanical endurance: | > 8.500 operating cycles |
| Protection degree: | IP 20 |
| Ambient temperature: | -5 °C to +40 °C (with daily average ≤ 35°C) |
| Storage temperature: | -25 °C to +70 °C |
| Terminal connection type: | cable/U-type busbar / Pin-type busbar |
| Connection: | from top and bottom |
| Terminal cross section: | 2,5 - 35 mm² |
| Terminal tightening torque: | 2.5 Nm |
| Terminal size for busbar: | 25 mm² |
| Mounting: | on DIN rail EN 60715 (35 mm) by means of fast clip device |

## DIMENSIONS

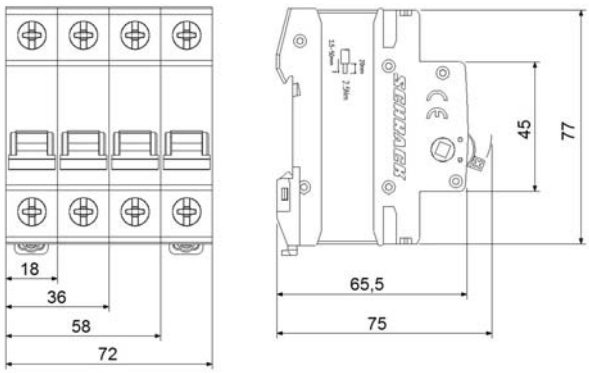


| DESCRIPTION | EAN CODE | AVAILABLE | ORDER NO. |
|---|---|---|---|
| **MAIN LOAD-BREAK SWITCH (ISOLATOR) SERIES AMPARO 32A** | | | |
| Main Load-Break Switch (Isolator) 32A, 1-pol | 9004840023855 | | AZ200241 |
| Main Load-Break Switch (Isolator) 32A, 2-pol | 9004840023862 | | AZ200242 |
| Main Load-Break Switch (Isolator) 32A, 3-pol | 9004840023879 | | AZ200243 |
| Main Load-Break Switch (Isolator) 32A, 4-pol | 9004840023886 | | AZ200244 |
| **MAIN LOAD-BREAK SWITCH (ISOLATOR) SERIES AMPARO 63A** | | | |
| Main Load-Break Switch (Isolator) 63A, 1-pol | 9004840023893 | | AZ200261 |
| Main Load-Break Switch (Isolator) 63A, 2-pol | 9004840023909 | | AZ200262 |
| Main Load-Break Switch (Isolator) 63A, 3-pol | 9004840023916 | | AZ200263 |
| Main Load-Break Switch (Isolator) 63A, 4-pol | 9004840023923 | | AZ200264 |
| **MAIN LOAD-BREAK SWITCH (ISOLATOR) SERIES AMPARO 100A** | | | |
| Main Load-Break Switch (Isolator) 100A, 1-pol | 9004840023978 | | AZ200201 |
| Main Load-Break Switch (Isolator) 100A, 2-pol | 9004840023985 | | AZ200202 |
| Main Load-Break Switch (Isolator) 100A, 3-pol | 9004840023992 | | AZ200203 |
| Main Load-Break Switch (Isolator) 100A, 4-pol | 9004840024005 | | AZ200204 |
| **MAIN LOAD-BREAK SWITCH (ISOLATOR) SERIES AMPARO 125A** | | | |
| Main Load-Break Switch (Isolator) 125A, 1-pol | 9004840024012 | | AZ200221 |
| Main Load-Break Switch (Isolator) 125A, 2-pol | 9004840024029 | | AZ200222 |
| Main Load-Break Switch (Isolator) 125A, 3-pol | 9004840024036 | | AZ200223 |
| Main Load-Break Switch (Isolator) 125A, 4-pol | 9004840024043 | | AZ200224 |

## REMOTE SWITCH STELLA

LQ540000

### SCHRACK INFO

- Low switching noise
- Energy saving function 0.5 – 30 minutes
- High switching capacity, 80 A start-up peak
- LED display

### APPLICATIONS

- The ideal solution for cellar lights in multi-family houses

### FEATURES

Electronic remote switch with energy saving function. Pressing a button switches the light on or off. Should the light not be turned off in the set time, it is switched off automatically by the energy saving function. The control input allows the connection of pushbuttons with up to 100 mA glow lamp load and enables the application in 3- or 4-wire circuits.

### TECHNICAL DATA

| | |
|---|---|
| **TIME RANGES:** | |
| Delay | Adjustment range 0.5 - 30 min |
| **INDICATORS:** | |
| Green LED ON | Indication of supply voltage |
| Yellow LED ON/OFF | Position of output relay |
| **MECHANICAL DESIGN:** | |
| Housing | Made of self-extinguishing plastic, IP rating IP40 |
| Mounting | on DIN rail TS 35 according to EN 60715 |
| Shockproof terminal connection according to VBG 4 (PZ1 required) | IP rating IP20 |
| **TERMINALS:** | |
| Tightening torque | Max 1 Nm |
| Terminal capacity | 1 x 0.5 to 2.5 mm² with/without multicore cable end<br>2 x 0.5 to 1.5 mm² with/without multicore cable end<br>1 x 4 mm² without multicore cable end<br>2 x 2.5 mm² flexible without multicore cable end |
| **INPUT CIRCUIT:** | |
| Supply voltage | Terminals L - N |
| Nominal voltage | 230 V AC / 50/60 Hz |
| Tolerance | -15% to +10% |
| Rated consumption | 2 VA (1.0 W) |
| Nominal frequency | AC 48 to 63 Hz |
| Duty cycle | 100% |
| Reset time | 500 ms |
| Drop-out voltage | >30% |
| Overvoltage category | III (according to IEC 60664-1) |
| Rated surge voltage | 4 kV |

## TECHNICAL DATA – continued

| | |
|---|---|
| **OUTPUT:** | |
| 1 normally open contact | Terminals L - 18 |
| Rated voltage | 250 V AC |
| Switching capacity | 10 A continuous current |
| Switching capacity | 16 A continuous current |
| Start-up peak (20 ms) | 80 A |
| Mechanical life | 30 x $10^6$ operations |
| Electrical life | Resistive load: $10^5$ operations at 16 A 250 V<br>Lamp load: 80,000 operations at 1000 W 250 V |
| **CONTROL INPUT B1:** | |
| Connection not potential-free | Pushbutton B1-N (3-conductor circuit)<br>Pushbutton B1-L (4-conductor circuit) |
| Glow lamp load | Max. 100 mA parallel to the pushbuttons |
| Overload protection | Electronic |
| **ACCURACY:** | |
| Base accuracy | ±5% of maximum scale value |
| Adjustment accuracy | <15% of maximum scale value |
| Repetition accuracy | <2% |
| Temperature influence | ≤1% |
| **AMBIENT CONDITIONS:** | |
| Ambient temperature | -25 to + 55 °C (complies with IEC 68-1) |
| Storage temperature | -25 to +70 °C |
| Relative humidity | 15% to 85% (according to IEC 60721-3-3 class 3K3) |
| Pollution degree | 2, when built-in 3 (according to IEC 60664-1) |
| **WEIGHT:** | |
| Individual packaging | 80 g |

## DIMENSIONS

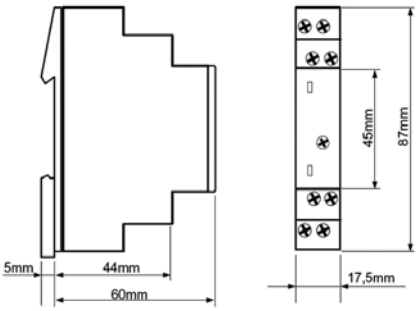


| DESCRIPTION | PU | TYPE | EAN CODE | AVAILABLE | ORDER NO. |
|---|---|---|---|---|---|
| Remote switch with energy saving function 10 A | 1 | 1 | 9004840618204 | | LQ540000 |

# REMOTE SWITCH FOR DIN RAIL MOUNTING (IMPULSE SWITCH)

LQ611230

LQ622230

## SCHRACK INFO

The mechanical impulse switches from Schrack Technik provide optimal availability. The use of pushbuttons and pushbuttons with light function allow convenient switching operations. The remote switches are available with rated coil voltages from 8 V AC to 230 V AC and with 12 V DC and 24 V DC. Different contact assignments (NO, NC, CO) can be to tailored to your application. In addition, it is possible to order an impulse switch with indication of the switching condition of the coil.

## APPLICATIONS

The remote switches are used primarily in multi-family houses, control technology, and office buildings.

## STANDARDS

- EN 60669-1/99 + A1/02
- EN60669-2-2/97 +A1/97

## ACCESSORIES

Compensation module (required when exceeding the maximum number of illuminated pushbuttons)

## TECHNICAL DATA

| | |
|---|---|
| **Control circuit:** | |
| Control voltage Us: | 8, 12, 24, 48, 230 V AC 50 Hz<br>8, 12, 24, 110 V DC |
| Functional range: | 0.9 - 1.1 x $U_s$ |
| Attraction power of solenoid coils: | 12 VA / 7 W typ. |
| Minimum command time: | > 200 ms |
| Duty cycle: | 1 MW: 1 hour, unlimited with spacer<br>2 MW: max. 1 hour with spacer |
| **Load circuit:** Rated operating voltage, 1-pole: | 250 V AC |
| Rated operating voltage, 4-pole: | 240 / 415 V AC |
| Minimum operating voltage $U_{min}$: | 24 V AC/DC |
| Rated current DC: | 24 V $I_e$ 16 A<br>48 V $I_e$ 12.5 A<br>230 V $I_e$ 1 A |
| Rated continuous current $I_u$: | 16 A AC |
| Short-circuit current: | 10 kA (with 20 A gL/gG fuse) |
| Endurance, electrical: | 40 x $10^2$ operating cycles |
| Endurance, mechanical: | 1 x $10^6$ operating cycles |
| Terminal cross section: | 0.5-10 $mm^2$ sold and stranded<br>0.5-6 $mm^2$ finely stranded<br>with multicore cable end |
| Temperature range: | -25 °C to +45 °C |

## DIMENSIONS

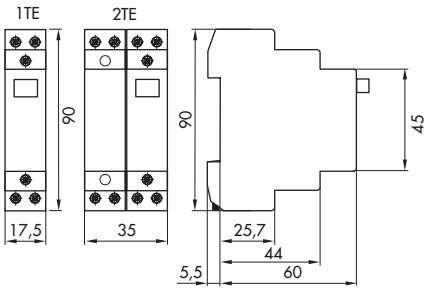


## APPLICATION EXAMPLE

Impulse switch with switchable LED

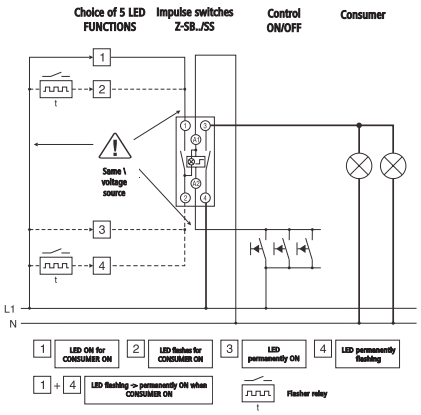

## REMOTE SWITCH AND CENTRAL MODULE

**COMPENSATION:**

The table below tells you how many compensator modules you need to operate a given number of illuminated pushbuttons in combination with different master modules. Use only with 230 V AC pushbuttons with glow lamps.

| Compensators | Remote switch | |
|---|---|---|
| | 1P-2P | 3P-4P |
| 0 | 8* | 15* |
| 1 | 23* | X |
| 2 | 46* | 43* |

* Number of 0.6 mA glow lamps

Max. number of parallel illuminated pushbuttons 230 V 0.85 mA typ.

| Remote switch (LQ6*) | |
|---|---|
| without compensation | 3 pcs. (1MW, 2MW) |
| with compensation | 13 pcs. (1MW), 6 pcs. (2MW) |
| with compensation | 21 pcs. (1MW), 12 pcs. (2MW) |

**Compensation with capacitor bank**

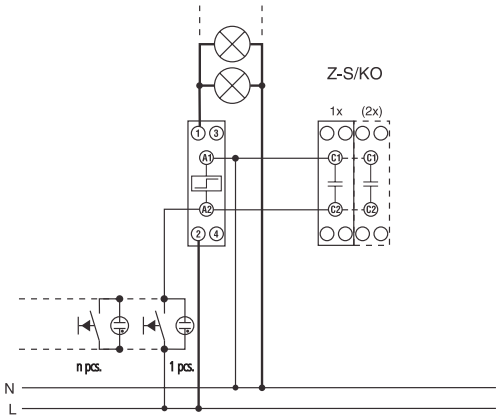


| DESCRIPTION | MW | EAN CODE | AVAILABLE | ORDER NO. |
|---|---|---|---|---|
| Remote switch, 1 NO, 8 V AC | 1 | 9004840374957 | | LQ611008 |
| Remote switch, 1 NO, 12 V AC | 1 | 9004840374940 | | **LQ611012** |
| Remote switch, 1 NO, 24 V AC/12 V DC | 1 | 9004840374933 | | **LQ611024** |
| Remote switch, 1 NO, 48 V AC/24 V DC | 1 | 9004840374926 | | **LQ611048** |
| Remote switch, 1 NO, 230 V AC | 1 | 9004840374902 | | **LQ611230** |
| Remote switch, 2 NO, 12 V AC | 1 | 9004840375008 | | LQ612012 |
| Remote switch, 2 NO, 24 V AC/12 V DC | 1 | 9004840374995 | | **LQ612024** |
| Remote switch, 2 NO, 48 V AC/24 V DC | 1 | 9004840374988 | | **LQ612048** |
| Remote switch, 2 NO, 110 V AC | 1 | 9004840374971 | | LQ612110 |
| Remote switch, 2 NO, 230 V AC | 1 | 9004840374964 | | **LQ612230** |
| Remote switch, 1 NO + 1 NC, 24 V AC/12 V DC | 2 | 9004840375053 | | LQ614024 |
| Remote switch, 1 NO + 1 NC, 48 V AC/24 V DC | 2 | 9004840375046 | | LQ614048 |
| Remote switch, 1 NO + 1 NC, 110 V AC | 2 | 9004840375039 | | LQ614110 |
| Remote switch, 1 NO + 1 NC, 230 V AC | 2 | 9004840375022 | | LQ614230 |
| Remote switch, 2 NO + 2 NC, 24 V AC/12 V DC | 3 | 9004840375220 | | LQ616024 |
| Remote switch, 2 NO + 2 NC, 48 V AC/24 V DC | 3 | 9004840375213 | | LQ616048 |
| Remote switch, 2 NO + 2 NC, 110 V AC | 3 | 9004840375206 | | LQ616110 |
| Remote switch, 2 NO + 2 NC, 230 V AC | 3 | 9004840375190 | | LQ616230 |
| Remote switch, 1 CO, 8 V AC | 1 | 9004840375138 | | LQ617008 |
| Remote switch, 1 CO, 12 V AC | 1 | 9004840375121 | | LQ617012 |
| Remote switch, 1 CO, 24 V AC/12 V DC | 1 | 9004840375114 | | LQ617024 |
| Remote switch, 1 CO, 48 V AC/24 V DC | 1 | 9004840375107 | | **LQ617048** |
| Remote switch, 1 CO, 230 V DC | 1 | 9004840375084 | | **LQ617230** |
| Remote switch, 2 CO, 230 V AC | 2 | 9004840375251 | | **LQ618230** |
| Remote switch with LED, 2 NO, 24 V AC | 1 | 9004840375176 | | LQ622024 |
| Remote switch with LED, 2 NO, 230 V AC | 1 | 9004840375169 | | **LQ622230** |
| Remote switch with LED, 2 NO, 24 V DC | 1 | 9004840375183 | | LQ622D24 |
| Compensator module 230 V AC | - | 9004840394313 | | **LQ690001** |

# RAIL MOUNTED CENTRAL REMOTE SWITCH (IMPULSE CURRENT RELAY WITH CENTRAL FUNCTION)

LQ661230

## SCHRACK INFO

Schrack Technik impulse switches with central function offer excellent control possibilities for many applications. Different contact assignment combinations are possible to provide the right solution for each case. The central remote switching units are available with coil voltages from 24 V AC to 230 V AC – with at least 1 NO and up to 3 NO contacts or other contact combinations. The use of illuminated pushbuttons for controlling loads with the central remote switching units requires compensation modules to avoid unwanted switching operations.

## APPLICATIONS

Central remote switching units are used very frequently for lighting control in large and small office buildings and single or multi-family homes to switch on/off several groups simultaneously from a central location. Several group levels can be realized, where larger applications require the use of diode modules.

## STANDARDS

- EN 60669-1/99 + A1/02
- EN60669-2-2/97 +A1/97

## ACCESSORIES

- Compensation module (required when exceeding the maximum number of illuminated pushbuttons)
- Diode module (required, e.g., in multi-stage group circuits)

## TECHNICAL DATA

| | |
|---|---|
| **Control circuit:** | |
| Control voltage $U_s$ : | 24, 110, 230 V AC, others on request |
| Rated frequency: | 50 Hz 24 V; 50 - 400 Hz 240 V |
| Functional range: | 0.9 - 1.1 x $U_s$ |
| Max. power of solenoid coils: | |
| switch on | 12 VA / typ. 7 VA |
| Minimum command time: | > 200 ms |
| Duty cycle: | 1 MW: 100% permanent contact-proof, control by continuous pulse and time switches possible |
| | 2 MW: max. 1 hour with spacer |
| **Load circuit:** | |
| Rated operating voltage, 1-pole: | 250 V AC; 2 / 3 |
| Rated operating voltage, 3-pole: | 240 / 415 V AC |
| Minimum operating voltage $U_{min}$: | 24 V AC/DC ($U_s$ 8-110 V) |
| Rated continuous current $I_u$: | 16 A AC |
| Rated current DC: | 24 V $I_e$ 16 A |
| | 48 V $I_e$ 12.5 A |
| | 230 V $I_e$ 1 A |
| Short-circuit current: | 10 kA (with 20 A gL/gG fuse) |
| Endurance, electrical: | 40 x $10^2$ operating cycles |
| Endurance, mechanical: | 1 x $10^3$ operating cycles |
| Terminal cross section: | 0.5-10 $mm^2$ sold and stranded |
| | 0.5-6 $mm^2$ finely stranded |
| | with multicore cable end |
| Temperature range: | -25 °C to +45 °C |

## DIMENSIONS

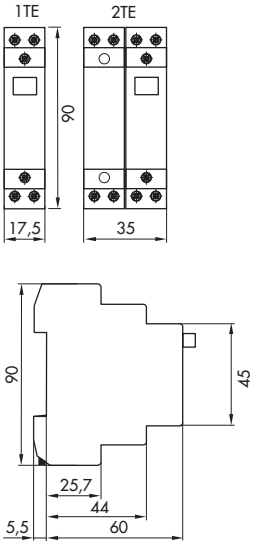


## APPLICATION EXAMPLE

**Schematic diagram for central, group and local control**

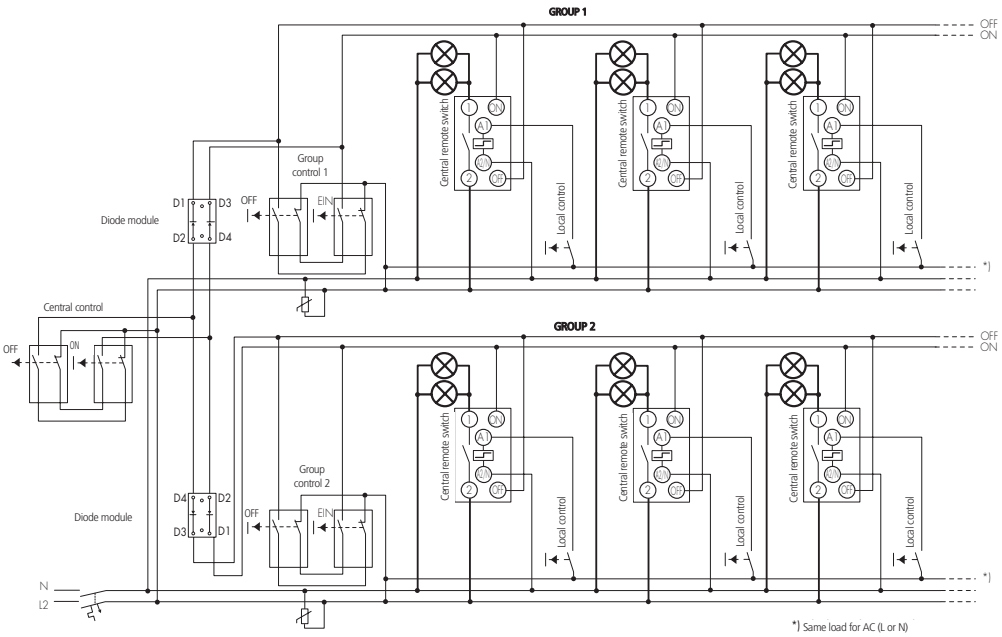


## REMOTE SWITCH AND CENTRAL MODULE

**COMPENSATION:**

The list below tells you how many compensator modules you need to operate a given number of illuminated pushbuttons in combination with different master modules. Use only with 230 V AC pushbuttons with glow lamps.

| Compensators | Central remote switch | |
|---|---|---|
| | 1P-2P | 3P-4P |
| 0 | 8* | 15* |
| 1 | 23* | X |
| 2 | 46* | 43* |

* Number of 0.6 mA glow lamps

Max. number of parallel illuminated pushbuttons 230 V 0.85 mA typ.

| Remote switch (LQ6*) | |
|---|---|
| without compensation | 3 pcs. (1MW, 2MW) |
| with compensation | 13 pcs. (1MW), 6 pcs. (2MW) |
| with compensation | 21 pcs. (1MW), 12 pcs. (2MW) |

**Compensation with capacitor bank**

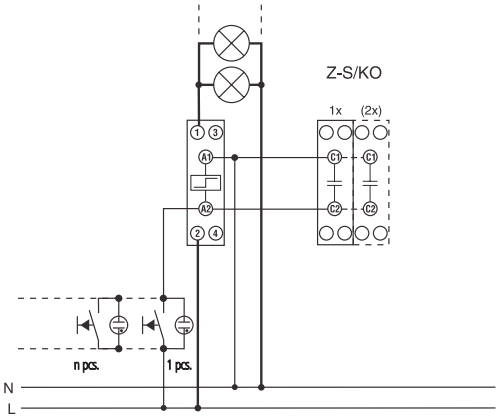


| DESCRIPTION | MW | EAN CODE | AVAILABLE | ORDER NO. |
|---|---|---|---|---|
| Central remote switch, 1 NO, 24 V AC | 1 | 9004840375152 | | **LQ661024** |
| Central remote switch, 3 NO, 110 V AC | 1 | 9004840375329 | | LQ663110 |
| Central remote switch, 1 NO, 230 V AC | 1 | 9004840375145 | | **LQ661230** |
| Central remote switch, 3 NO, 230 V AC | 2 | 9004840375312 | | **LQ663230** |
| Central remote switch, 2 NO + 1 NC, 230 V AC | 2 | 9004840375350 | | LQ665230 |
| Central remote switch, 1 NO + 1 CO, 230 V AC | 2 | 9004840375336 | | LQ669230 |
| Diode module 240 V AC | 2 | 9004840394320 | | LQ690000 |
| Compensator module 240 V AC | - | 9004840394313 | | **LQ690001** |

## MODULAR RELAY BZ651000

BZ651000

### SCHRACK INFO

- Coupling relay
- 1 CO
- Width 17.5 mm
- Installation design

### DIMENSIONS

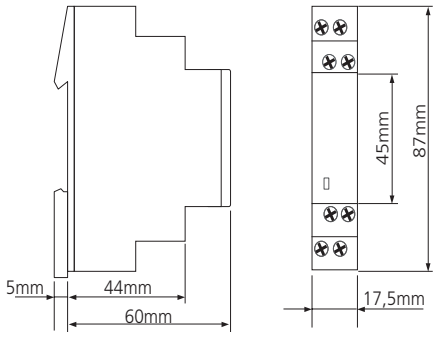


### CIRCUIT DIAGRAM

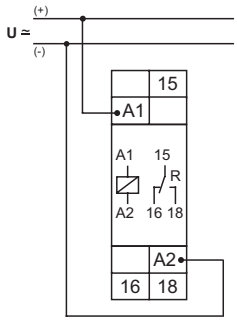


### TECHNICAL DATA

| | | |
|---|---|---|
| **INPUT CIRCUIT:** | | |
| | Supply voltage | 24 to 240 V AC/DC |
| | Terminals | A1(+)-A2 |
| | Tolerance | -15% to +10% |
| | Rated surge voltage | 4 kV |
| **OUTPUT CIRCUIT** | | |
| 1 potential-free changeover switch | | |
| | Rated voltage | 250 V AC |
| | Switching capacity | 2000 VA (8 A / 250 V) |
| | Fuse | 8 A fast acting |
| | Switching frequency | Max. 6/min at 1000 VA resistive load (according to IEC 60947-5-1) |
| | Overvoltage category | III (according to IEC 60664-1) |
| | Rated surge voltage | 4 kV |
| **AMBIENT CONDITIONS** | | |
| | Ambient temperature | -25 to +55 °C |
| **WEIGHT** | | |
| | Individual packaging | 60g |

| DESCRIPTION | MW | PU | EAN CODE | AVAILABLE | ORDER NO. |
|---|---|---|---|---|---|
| Modular relay | | | | | |
| 1 CO, 24-240 V AC/DC | 1 | 10 | 9004840557381 | | BZ651000 |

# MODULAR RELAY BZ652000

BZ652000

## SCHRACK INFO

- Coupling relay
- 2 CO
- Width 35 mm
- Installation design

## DIMENSIONS

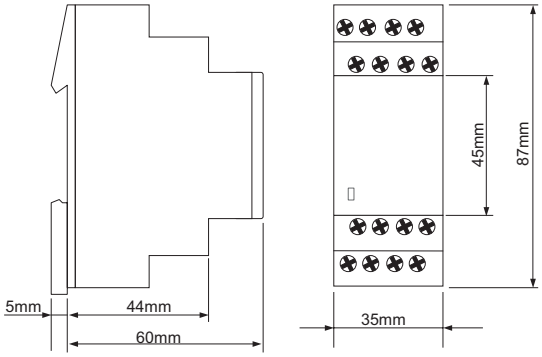


## CIRCUIT DIAGRAM

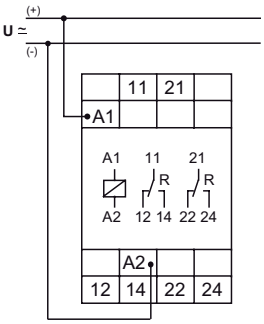


## TECHNICAL DATA

| | | |
|---|---|---|
| **INPUT CIRCUIT:** | | |
| | Supply voltage | 12 to 240 V AC/DC |
| | Terminals | A1(+)-A2 |
| | Tolerance | -10% to +10% |
| | Rated surge voltage | 4 kV |
| **OUTPUT CIRCUIT** | | |
| 2 potential-free changeover switches | | |
| | Rated voltage | 250 V AC |
| | Switching capacity | 2000 VA (8 A / 250 V) |
| | Fuse | 8 A fast acting |
| | Switching frequency | Max. 6/min at 1000 VA resistive load (according to IEC 60947-5-1) |
| | Overvoltage category | III (according to IEC 60664-1) |
| | Rated surge voltage | 4 kV |
| **AMBIENT CONDITIONS** | | |
| | Ambient temperature | -25 to +55 °C |
| **WEIGHT** | | |
| | Individual packaging | 100g |

| DESCRIPTION | MW | PU | EAN CODE | AVAILABLE | ORDER NO. |
|---|---|---|---|---|---|
| Modular relay | | | | | |
| 2 CO, 12-240 V AC/DC | 1 | 1 | 9004840557473 | | BZ652000 |

## DIN RAIL CONTACTORS, SERIES AMPARO

BZ326437ME

BZ326464ME

BZ326444ME

## SCHRACK INFO

- These contactors are frequently applied for applications in general control, heating & lighting applications
- Noise reducing design
- Low vibration on DIN-rail
- 24 V coils 50/60 Hz, 230 V coils 50/60 Hz
- DIN modular profile

## TECHNICAL DATA

| Standards: | | IEC/EN 60947-4-1 / IEC/EN 61095 | | | |
|---|---|---|---|---|---|
| Rated thermal Current $I_{th}$: | | 20 A | 25 A | 40 A | 63 A |
| Nominal operating voltage 1-phase $U_e$: | | 230 V | 230 V | 230 V | 230 V |
| Nominal operating voltage 3-phase $U_e$: | | - | 400 V | 400 V | 400 V |
| AC1 at $U_e$ = 230VAC | | 4.5 kW | 16 kW | 27.5 kW | 40 kW |
| AC1 at $U_e$ = 400VAC | | 1.2 kW | 16 kW | 27.5 kW | 40 kW |
| AC3 at $U_e$ = 400VAC | | - | 4 kW | 12.5 kW | 15 kW |
| Incandescent lamp | Lamp | Maximum number of fittings per contactor type | | | |
| | 40 W | 32 | 50 | 122 | 195 |
| | 60 W | 21 | 33 | 86 | 130 |
| | 100 W | 13 | 20 | 52 | 78 |
| Fluorescent lamp conventional supply | Lamp | Maximum number of fittings per contactor type | | | |
| Single fitting uncompensated (inductive) | 18 W | 22 | 24 | 90 | 140 |
| | 24 W | 22 | 24 | 90 | 140 |
| | 36 W | 17 | 20 | 65 | 95 |
| | 58 W | 14 | 17 | 45 | 70 |
| Single fitting uncompensated (capacitive) | 18 W | 7 | 8 | 48 | 73 |
| | 24 W | 7 | 8 | 48 | 73 |
| | 36 W | 7 | 8 | 48 | 73 |
| | 58 W | 4 | 5 | 31 | 47 |
| Double fitting - Series compensated | 2 x 18 W | 30 | 40 | 100 | 150 |
| | 2 x 24 W | 24 | 31 | 78 | 118 |
| | 2 x 36 W | 17 | 24 | 65 | 95 |
| | 2 x 58 W | 10 | 14 | 40 | 60 |
| Fluorescent lamp HF electronic | Lamp | Maximum number of fittings per contactor type | | | |
| Single fitting - HF electronic | 18 W | 25 | 31 | 49 | 71 |
| | 24 W | 18 | 22 | 35 | 50 |
| | 36 W | 14 | 17 | 27 | 39 |
| | 58 W | 8 | 10 | 16 | 23 |
| Double fitting - HF electronic | 2 x 18 W | 12 | 15 | 24 | 35 |
| | 2 x 24 W | 9 | 11 | 17 | 25 |
| | 2 x 36 W | 7 | 8 | 13 | 19 |
| | 2 x 58 W | 4 | 5 | 8 | 11 |
| Maximum back up fuse | - | 25A gL/gG | 35A gL/gG | 63A gL/gG | 63A gL/gG |
| Module width | - | 1 MW | 2 MW | 3 MW | 3 MW |
| Protection class | - | IP20 | IP20 | IP20 | IP20 |

## DIMENSIONS

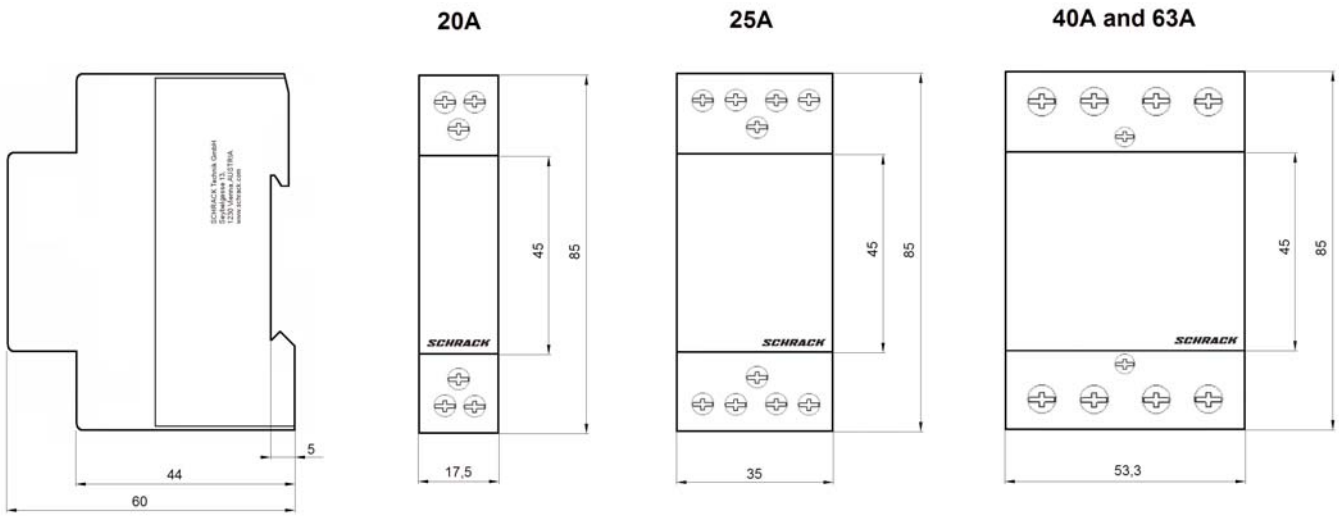


| DESCRIPTION | MW | EAN CODE | AVAILABLE | ORDER NO. |
|---|---|---|---|---|
| **230VAC - COIL** | | | | |
| 20A, 2 NO | 1 | 9004840114669 | | **BZ326437ME** |
| 20A, 1 NO+1 NC | 1 | 9004840114485 | | **BZ326438ME** |
| 20A, 2 NC | 1 | 9004840114850 | | **BZ326439ME** |
| 25A, 4 NO | 2 | 9004840114898 | | **BZ326461ME** |
| 25A, 3 NO+1 NC | 2 | 9004840114904 | | **BZ326463ME** |
| 40A, 2 NO+2 NC | 3 | 9004840114928 | | **BZ326466ME** |
| 40A, 4 NO | 3 | 9004840114911 | | **BZ326442ME** |
| 63A, 4 NO | 3 | 9004840114942 | | **BZ326444ME** |
| **240VAC - COIL** | | | | |
| 20A, 2 NO | 1 | 9004840114652 | | **BZ326453ME** |
| 20A, 1 NO+1 NC | 1 | 9004840114645 | | **BZ326421ME** |
| 25A, 4 NO | 2 | 9004840114881 | | **BZ326460ME** |

## STAIRCASE TIMER, SERIES TIMON

BZ3272I0-A

### SCHRACK INFO

- Energy saving function
- Time range 0.5 to 30 minutes
- Low switching noise
- High switching capacity, 80 A peak inrush power
- Automatic 3-/4-conductor detection
- Glow lamp load up to 100 mA
- Width 17.5 mm
- Installation design

### FEATURES

Electronic staircase lighting timer with restart function (complies with EN 60669-2-3). The control input allows the connection of pushbuttons with up to 100 mA glow lamp load and enables the application in 3- or 4-wire circuits. After an ON duration of about 5 seconds, a long key press (>2 s) will switch off the unit (energy saving function).

### TECHNICAL DATA

| | |
|---|---|
| **TIME RANGES:** | |
| Delay | Adjustment range 0.5 - 30 min |
| **INDICATORS:** | |
| Green LED ON | Indication of supply voltage |
| Yellow LED ON/OFF | Position of output relay |
| **MECHANICAL DESIGN:** | |
| Housing | Made of self-extinguishing plastic, IP rating IP40 |
| Mounting | on DIN rail TS 35 according to EN 60715 |
| Shockproof terminal connection according to VBG 4 (PZ1 required) | IP rating IP20 |
| **TERMINALS:** | |
| Tightening torque | Max 1 Nm |
| Terminal capacity | 1 x 0.5 to 2.5 mm² with/without multicore cable end<br>2 x 0.5 to 1.5 mm² with/without multicore cable end<br>1 x 4 mm² without multicore cable end<br>2 x 2.5 mm² flexible without multicore cable end |
| **INPUT CIRCUIT:** | |
| Supply voltage | Terminals L - N |
| Nominal voltage | 230 V AC / 50/60 Hz |
| Tolerance | -15% to +10% |
| Rated consumption | 2 VA (1.0 W) |
| Nominal frequency | AC 48 to 63 Hz |
| Duty cycle | 100% |
| Reset time | 500 ms |
| Drop-out voltage | >30% |
| Overvoltage category | III (according to IEC 60664-1) |
| Rated surge voltage | 4 kV |

## TECHNICAL DATA – continued

| | |
|---|---|
| **OUTPUT:** | |
| 1 normally open contact | Terminals L - 18 |
| Rated voltage | 250 V AC |
| Switching capacity | 10 A continuous current |
| Switching capacity | 16 A continuous current |
| Start-up peak (20 ms) | 80 A |
| Mechanical life | 30 x $10^6$ operations |
| Electrical life | Resistive load: $10^5$ operations at 16 A 250 V<br>Lamp load: 80,000 operations at 1000 W 250 V |
| **CONTROL INPUT B1:** | |
| Connection not potential-free | Pushbutton B1-N (3-conductor circuit)<br>Pushbutton B1-L (4-conductor circuit) |
| Glow lamp load | Max. 100 mA parallel to the pushbuttons |
| Overload protection | Electronic |
| **ACCURACY:** | |
| Base accuracy | ±5% of maximum scale value |
| Adjustment accuracy | <15% of maximum scale value |
| Repetition accuracy | <2% |
| Temperature influence | ≤1% |
| **AMBIENT CONDITIONS:** | |
| Ambient temperature | -25 to + 55 °C (complies with IEC 68-1) |
| Storage temperature | -25 to + 55 °C |
| Transport temperature | -25 to + 55 °C |
| Relative humidity | 15% to 85% (according to IEC 60721-3-3 class 3K3) |
| Pollution degree | 2, when built-in 3 (according to IEC 60664-1) |
| **WEIGHT:** | |
| Individual packaging | 80 g |

## DIMENSIONS

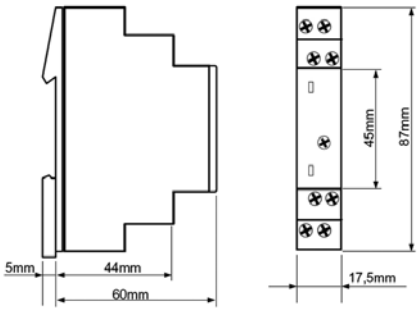


## CONNECTION DIAGRAMS

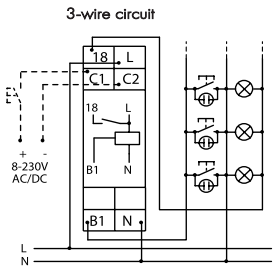


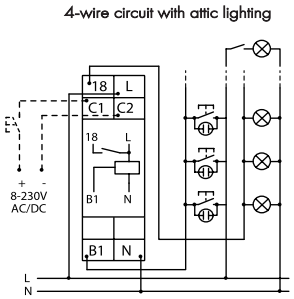


| DESCRIPTION | MW | TYPE | EAN CODE | AVAILABLE | ORDER NO. |
|---|---|---|---|---|---|
| Staircase lighting timer 0.5-30 min. 10 A electronic | 1 | 1 | 9004840618198 | | BZ327210-A |

## STAIRCASE TIMER, SERIES VOWA

BZ327350

### SCHRACK INFO

- Switch-off warning
- Time delay, long-time function programmable
- Energy saving function
- Impulse switch mode selectable
- Low switching noise
- High switching capacity, 80 A start-up peak
- Automatic 3-/4-conductor detection
- Glow lamp load up to 100 mA
- Width 17.5 mm
- Installation design

### FEATURES

Electronic staircase lighting timer with switch-off warning. The control input allows the connection of pushbuttons with a total of up to 100 mA glow lamp load and enables the application in 3- or 4-wire circuits. The unit can be time-delayed via a connected pushbutton and switched off by a long key press (energy saving function). By "pumping", the delay can be increased to a multiple of the freely selectable time t. Depending on the type, the following operating modes can be selected using the controls on the front:

| | |
|---|---|
| 0 | Off |
| 1 | Continuous light (ON) |
| TW | Automatic timer with switch-off warning |

**Only for BZ327360:**

| | |
|---|---|
| T | Automatic timer without switch-off warning |
| P | Impulse switch mode without time function |
| PN | Impulse switch mode, power fail latch |

### CONTROL OPTIONS ON B1 IN AUTOMATIC TIMER MODE – MORE FUNCTIONS VOWA PLUS

The additional control input C1-C2 mode allows in T and TW modes the activation of the staircase lighting timer by a voltage of 8 to 230 V AC/DC. This input can be used to start and restart the timing function. Shutdown (energy saving function) and programming of longer times (pumping) is not possible using this input.

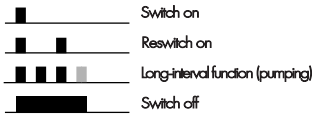


### AUTOMATIC TIMER MODE (T, TW)

After the pushbutton B1 has been pressed, the output relay R (terminals L-18) closes and the set interval t begins. If the pushbutton is pressed again before the interval t has expired, the time begins again (restart function complies with EN 60669-2-3). Rapid, multiple pressing the pushbutton adds 2, 3 or more time intervals to extend the time up to 60 min. A long press (> 2 s) aborts the current interval, and the relay switches off (energy saving function). In TW mode, the device provides a switch-off warning (in accordance with DIN 180-158-2) by generating short pulses (flashing) at 30 s, 15 s and 5 s prior to switch-off.

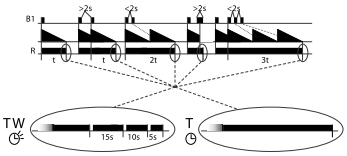


### IMPULSE SWITCH MODE (P), (PN)

In impulse switch mode, every key press of B1 toggles the output relay R (flip-flop). In function P, the output relay R remains in the off-position, whenever the supply voltage is applied. In function PN, the output relay R immediately switches on after applying the supply voltage U, if the output relay R was in the On position last before the power failure. The output relay R switches On, if a short voltage impulse (<2 s) is applied to the additional control input (C1-C2). A longer voltage impulse (> 2 s) opens the relay R (central OFF).

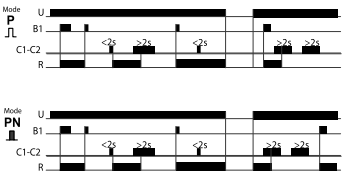

## TECHNICAL DATA

| | |
|---|---|
| **TIME RANGES** | |
| Time delay adjustment range | 0.5 - 12 min (in function T, TW) |
| Indicators | Green LED ON supply voltage is applied, yellow LED ON/OFF position of the output relay |
| **SHOCKPROOF CLAMPING YOKE TERMINALS** | |
| Tightening torque | Max 1 Nm |
| Terminal capacity | 1 x 0.5 to 2.5 mm² with/without multicore cable end, 2 x 0.5 to 1.5 mm² with/without multicore cable end, 1 x 4 mm² without multicore cable end, 2 x 2.5 mm² flexible without multicore cable end |
| **INPUT CIRCUIT:** | |
| Supply voltage | Terminals L - N |
| Nominal voltage | 230 V AC / 50/60 Hz |
| Rated consumption | 2 VA (1.0 W) |
| Duty cycle | 100% |
| Reset time | 500 ms |
| **OUTPUT** | |
| 1 normally open contact | Terminals L - 18 |
| Rated voltage | 250 V AC |
| Switching capacity (distance < mm) | 10 A continuous current, start-up peak (20 ms) 80 A |
| Endurance, electrical, resistive load: | $10^5$ operations at 16 A 250 V |
| Lamp load: | 80,000 operations at 1000 W 250 V |
| **CONTROL INPUT B1** | |
| Connection not potential-free | Pushbutton B1-N (3-conductor circuit), pushbutton B1-L (4-conducto circuit) |
| Glow lamp load | Max. 100 mA parallel to the pushbuttons, electronic overload protection |
| **ADDITIONAL CONTROL INPUT BZ327360** | |
| Connection | Control voltage at terminals C1 (+) - C2 |
| Control voltage | 8 to 230 V AC/DC |
| Galvanic isolation | Yes, basic insulation |
| Ambient conditions | Ambient temperature -25 to + 55 °C (complies with IEC 68-1) |
| Dimensions | 1 MW |

## CONNECTION DIAGRAMS

3-wire circuit

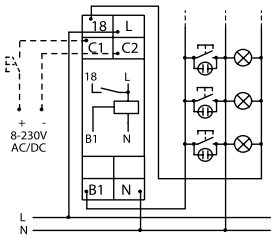


4-wire circuit with attic lighting

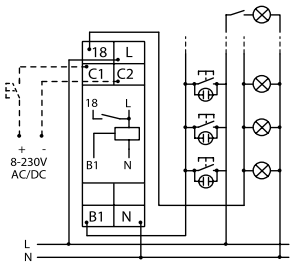


| DESCRIPTION | MW | PU | EAN CODE | AVAILABLE | ORDER NO. |
|---|---|---|---|---|---|
| Staircase lighting timer VOWA | 1 | 10 | 9004840450323 | | BZ327350 |
| Staircase lighting timer VOWA-PLUS | 1 | 10 | 9004840450330 | | BZ327360 |

## STAIRCASE TIMER, SERIES TIMON M

### SCHRACK INFO

- Staircase time switch, electronic
- 4 conductor with floor lighting connection
- 3 conductor without floor lighting
- Retriggerable
- No closed-circuit current consumption
- Toggle switch for permanent light ON
- Reliable due to synchronous motor drive
- Simplest possible time setting and direct delay time readout on absolute scale
- Precision mechanics and therefore exact switching period
- Very low sensitivity to interference

### TECHNICAL DATA

| | |
|---|---|
| Operating voltage | 230 V AC |
| Frequency | 50 Hz |
| Width | 1 module |
| Installation type | DIN rail |
| Stand-by consumption | 0 W |
| Glow lamp load | 50 mA |
| Setting range time | 1 – 7 min |
| Type of connection | 3-/4-conductor |
| 3/4 conductor | Yes |
| Secondary switching | After 30 s |
| Type of contact | NO contact |
| Opening width | > 3 mm |
| Switching output | Not potential-free (230 V) |
| Incandescent/halogen lamp load | 2300 W |
| Fluorescent lamp load (conventional) lead-lag circuit | 2300 VA |
| Fluorescent lamp load (conventional) parallel corrected | 1300 VA, 70 µF |
| Energy saving lamps | 9 x 7 W, 6 x 11 W, 5 x 15 W, 5 x 20 W |
| Fluorescent lamp load (EVG) | 300 VA |
| Fluorescent lamp load (conventional) series corrected | 2300 VA |
| Fluorescent lamp load (conventional) not corrected | 2300 VA |
| Switching capacity | 10 AX (at 230 V AC, cos = 0.3), 16 A (at 230 V AC, cos = 1) |
| Switch for permanent light | Toggle switch |
| Test approval | VDE |
| Housing and insulation material | High-temperature resistant, self-extinguishing thermoplastic |
| Ambient temperature | -10 °C ... +50 °C |
| Protection class | II |
| Type of protection | IP 20 |

### DIMENSIONS

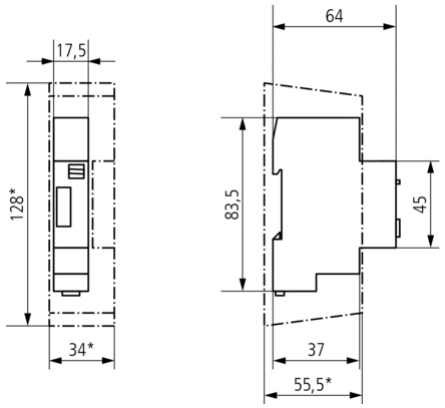


### CONNECTION EXAMPLE

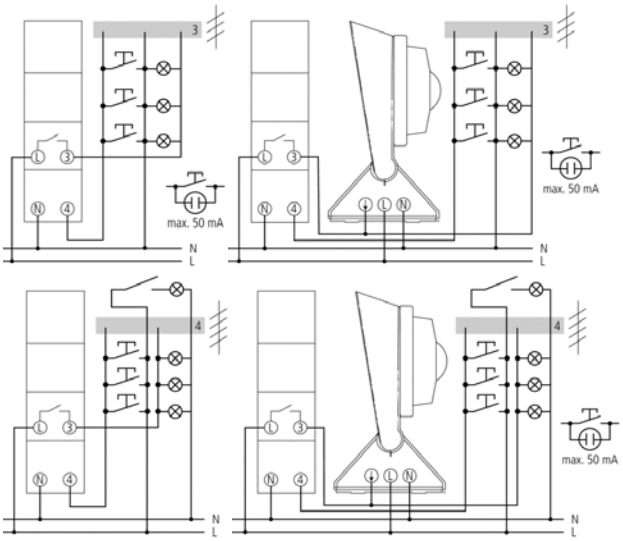


| DESCRIPTION | EAN CODE | AVAILABLE | ORDER NO. |
|---|---|---|---|
| TIMON M – Timers for staircase lighting | 9004840667172 | | BZ926350 |

## MODULAR SWITCH WITH PUSH-BUTTON, WITHOUT SIGNAL LAMP

BZ107020

### SCHRACK INFO

- Design according to IEC 947-3
- Rated voltage/frequency: 230/400 V AC, 50/60 Hz
- Conductor cross-section: 1-10 mm²
- Finger and hand touch safe VBG 4, ÖVE-EN 6, BVG A3
- Mounting system: Special snap-on mounting for DIN rail EN 50 022

| RATED CURRENT/CONTACTS | MW | PU | TYPE | EAN CODE | AVAILABLE | ORDER NO. |
|---|---|---|---|---|---|---|
| 16 A/1 NO | 1 | 12 | BZ A16/1NO | 9004840406474 | | BZ107010 |
| 16 A/2 NO | 1 | 12 | BZ A16/2NO | 9004840406481 | | BZ107020 |
| 16 A/1 NO / 1 NC | 1 | 12 | BZ S16/1NO/1NC | 9004840406498 | | BZ107030 |
| 16 A/1 CO | 1 | 12 | BZ W16/1CO | 9004840406504 | | BZ107050 |

## MODULAR SWITCH WITH PUSH-BUTTON AND LED, WITHOUT SIGNAL LAMP

BZ127131

### SCHRACK INFO

Light source: LED with a supply voltage of 24 V or 230 V AC/DC

Lift terminals with protection against incorrect insertion

- Design according to EN 60068
- Rated voltage/frequency: 230/400 V AC, 50/60 Hz
- Conductor cross-section: 1-10 mm²
- Finger and hand touch safe VBG 4, ÖVE-EN 6
- Mounting system: Special snap-on mounting for DIN rail EN 50 022

| RATED CURRENT/CONTACTS | MW | PU | TYPE | EAN CODE | AVAILABLE | ORDER NO. |
|---|---|---|---|---|---|---|
| 16 A/1 NO/1 NC/24 AC/DC | 1 | | BZ SL16/1NO/1NO | 9004840406528 | | BZ127131 |
| 16 A/2 NO/24 AC/DC | 1 | | BZ AL16/2NO | 9004840406511 | | BZ127121 |
| 16 A/1 NO/1 NC/230 AC/DC | 1 | | BZ SL16/1NO/1NC | 9004840406542 | | BZ117131 |
| 16 A/2 NO/230 AC/DC | 1 | | BZ AL16/2NO | 9004840406535 | | BZ117121 |

## MODULAR PUSH-BUTTON

BZ107430

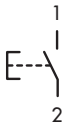


CIRCUIT DIAGRAM

### SCHRACK INFO

See the label for circuit diagrams of all pushbuttons

Lift terminals with protection against incorrect insertion

- Design according to EN 60068
- Rated voltage/frequency: 230/400 V AC, 50/60 Hz
- Conductor cross-section: 1-10 mm²
- Finger and hand touch safe VBG 4, ÖVE-EN 6
- Mounting system: Special snap-on mounting for DIN rail EN 50 022

| RATED CURRENT/CONTACTS | MW | PU | TYPE | EAN CODE | AVAILABLE | ORDER NO. |
|---|---|---|---|---|---|---|
| 16 A/1 NO | 1 | 1 | BZ T16/1NO | 9004840406436 | | **BZ107410** |
| 16 A/1 NO/1 NC | 1 | 1 | BZ T16/1NO/1NC | 9004840406443 | | **BZ107430** \| |

## MODULAR PUSH-BUTTON WITH LED

BZ117531

### SCHRACK INFO

Lift terminals with protection against incorrect insertion

- Design according to EN 60068
- Rated voltage/frequency: 230/400 V AC, 50/60 Hz
- Conductor cross-section: 1-10 mm²
- Finger and hand touch safe VBG 4, ÖVE-EN 6
- Mounting system: Special snap-on mounting for DIN rail EN 50 022

| RATED CURRENT/CONTACTS/VOLTAGE | MW | PU | TYPE | EAN CODE | AVAILABLE | ORDER NO. |
|---|---|---|---|---|---|---|
| 16 A/1 NO/1 NC/24 V AC/DC | 1 | | BZ TS16/1NO/1NC | 9004840406450 | | **BZ127531** |
| 16 A/1 NO/1 NC/230 V AC/DC | 1 | | BZ TS16/1NO/1NC | 9004840406467 | | **BZ117531** |

# MODULAR LED INDICATOR LIGHT, SERIES AMPARO

AZ106800

## SCHRACK INFO

- LED technology
- Operation current only 20mA
- No closed-circuit current consumption
- Snap-on mounting for DIN rail EN 50 022

## TECHNICAL DATA

| | |
|---|---|
| Standards: | IEC/EN 60947-5-1 |
| Rated voltage (AC): | 230 V |
| Rated frequency (AC): | 50/60 Hz |
| Insulation voltage $U_i$: | 500V |
| Rated operational current: | ≤ 20 mA |
| Rated impulse withstand voltage (1,2/50) $U_{imp}$: | 4 kV |
| Dielectric test voltage at ind. freq. for 1 min.: | 2 kV |
| Pollution degree: | 2 |
| Electrical life time: | LED ≥ 30.000h |
| Mechanical endurance: | > 20.000 operating cycles |
| Protection degree: | IP 20 |
| Reference temperature: | 30°C |
| Ambient temperature: | -5 °C to +40 °C<br>average temperature in 24 hours<br>not exceed +35°C |
| Altitude: | ≤ 2.000 m |
| Air conditions: | At mounting site, relative humidity not exceed 50% at the max temperature of +40°C,<br>higher relative humidity is allowed under lower temperature.<br>For example could be 90% at +20°C (Special measures should be taken to occurrence of dews). |
| Terminal cross section: | 0,5-6 mm² |
| Terminal tightening torque: | 0,8 Nm |
| Mounting: | on DIN rail EN 60715 (35mm) by means of fast clip device |

## DIMENSIONS

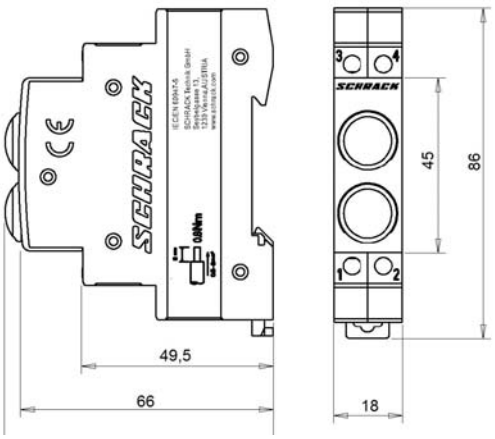


| DESCRIPTION | EAN CODE | AVAILABLE | ORDER NO. |
|---|---|---|---|
| **SINGLE LED** | | | |
| Modular-single-LED AMPARO, green, 230V AC | 9004840105902 | | AZ106800 |
| Modular-single-LED AMPARO, red, 230V AC | 9004840105919 | | AZ106801 |
| Modular-single-LED AMPARO, yellow, 230V AC | 9004840105926 | | AZ106802 |
| Modular-single-LED AMPARO, blue, 230V AC | 9004840105940 | | AZ106803 |
| Modular-single-LED AMPARO, white, 230V AC | 9004840105957 | | AZ106804 |
| **DOUBLE LED** | | | |
| Modular-single-LED AMPARO, red/green, 230V AC | 9004840105971 | | AZ106808 |

## MODULAR SOCKET OUTLETS


BZ325000


BZ325001-A

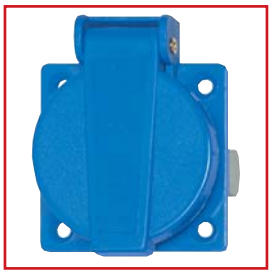
YY4926F


YY494518

| DESCRIPTION | DIM. (WxHxD) mm | PU | TYPE | EAN CODE | AVAILABLE | ORDER NO. |
|---|---|---|---|---|---|---|
| DIN rail mounted socket outlet with earth | 52x76x65 | 1 | REG-SD | 9004840198607 | | BZ325000-A |
| DIN rail mounted socket outlet with earth with LED | | 1 | | 9004840662528 | | BZ325003 |
| DIN rail mounted socket outlet with pin; for CH, CZ, F | 44.5x76x65 | 1 | REG-SD/CZ | 9004840198614 | | BZ325001-A |
| Socket outlet for front-mounting | 44.5x76x65 | 1 | SD-E bl. | 9004840063509 | | YY492639 |
| High current socket outlet CEE, DIN rail mounting | 5x16 | 1 | | 9004840409635 | | YY494518 |

## MODULAR BELL TRANSFORMER


BZ326579-A


BZ326577

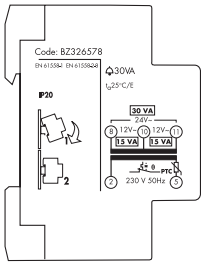


### SCHRACK INFO

- Rated voltage 230 V 50 Hz
- Rated output 8, 15, 24, 30 VA

| INPUT/OUTPUT | MW | DIM. (WxHxD) mm | PU | EAN CODE | AVAILABLE | ORDER NO. |
|---|---|---|---|---|---|---|
| 230 V AC prim./4.8, 12 V AC sec., 15 VA | 2 | 35x85x58 | 1 | 9004840082067 | | BZ326577-A |
| 230 V AC prim./12, 12, 24 V AC sec., 30 VA | 3 | 52x85x58 | 1 | 9004840082074 | | BZ326578-A |
| 230 V AC prim./12, 24 V AC sec., 63 VA | 6 | 105x85x65 | 1 | 9004840082081 | | BZ326579-A |

## DC POWER SUPPLY, INSTALLATION DESIGN TYPE, STABILISED


LP746201

### SCHRACK INFO

- DIN rail mounted power supply unit
- 230 V AC supply
- 24 V DC / 12 V DC outputvoltage

| DESCRIPTION | EAN CODE | AVAILABLE | ORDER NO. |
|---|---|---|---|
| Single-pole power supply unit, 230/24 V DC, 1.5 A | 9004840556988 | | **LP746201** |
| Single-pole power supply unit, 230/12 V DC, 2 A | 9004840556971 | | **LP7432C2** |

## MODULAR BELL


BZ326338

### SCHRACK INFO

- Continuous load up to 12 hours possible
- Coil voltage: 12, 230 V AC
- Own consumption: 4.5 VA
- Conductor cross-section: 10 $mm^2$
- 75 dB

| SUPPLY VOLTAGE | MW | DIM. (WxHxD) mm | PU | TYPE | EAN CODE | AVAILABLE | ORDER NO. |
|---|---|---|---|---|---|---|---|
| Bell, 230 V AC | 1 | 17.5x86x67 | 1 | 066625-SRK | 9004840166132 | | **BZ926338** |
| Bell, 12 V AC | 1 | 17.5x86x67 | 1 | 066627-SRK | 9004840166163 | | **BZ926351** |

## MODULAR BUZZER

BZ926339

### SCHRACK INFO

- Continuous load up to 12 hours possible
- Coil voltage: 12, 230 V AC
- Own consumption: 4.5 VA
- 77 dB

| SUPPLY VOLTAGE | MW | DIM. (WxHxD) mm | PU | EAN CODE | AVAILABLE | ORDER NO. |
|---|---|---|---|---|---|---|
| Buzzer, 230 V AC | 1 | 17.5x86x67 | 1 | 9004840166149 | | **BZ926339** |
| Buzzer, 12 V AC | 1 | 17.5x86x67 | 1 | 9004840166170 | | BZ9263453 |

# ANALOG DIN-RAIL TIME SWITCH SYNCHRON, SERIES TEMPUS ANALOG

## SCHRACK INFO

- Analogue time switch
- 1 channel
- Daily program
- Without power reserve
- 96 switching segments
- Synchronised with mains
- Shortest switching time: 15 minutes
- Screw terminals
- Manual switch with 3 positions: Permanent ON/AUTO/continuous OFF
- Switching status display

## TECHNICAL DATA

| | |
|---|---|
| Operating voltage | 230 V AC |
| Frequency | 50 Hz |
| Number of channels | 1 |
| Program | Daily program |
| Width | 1 module |
| Installation type | DIN rail |
| Type of connection | Screw terminals |
| Drive | Synchronous motor |
| Switching capacity at 250 V AC, cos φ = 1 | 16 A |
| Switching capacity at 250 V AC, cos φ = 0,6 | 4 A |
| Shortest switching times | 15 min |
| Programmable all | 15 min |
| Time accuracy | Synchronised with mains |
| Type of contact | NO contact |
| Switching output | Potential-free and phase-independent |
| Number of switching segments | 96 |
| Stand-by consumption | 0,9 W |
| Test approval | VDE |
| Housing and insulation material | High-temperature resistant, self-extinguishing thermoplastic |
| Type of protection | IP 20 |
| Protection class | II as per EN 60 730-1 |
| Ambient temperature | -25 °C ... +50 °C |

## DIMENSIONS

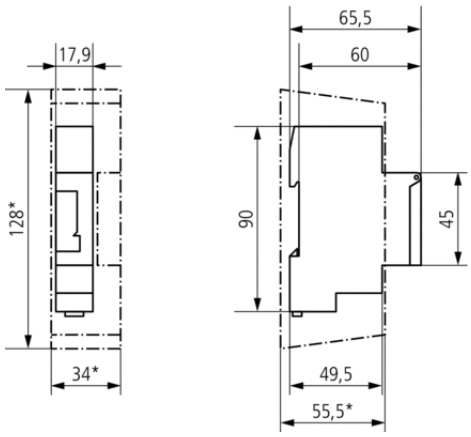


## CONNECTION EXAMPLE

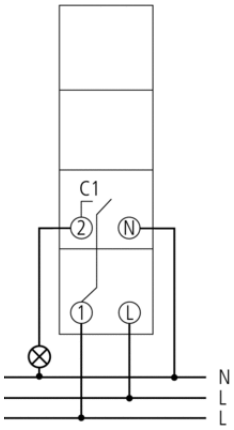


| DESCRIPTION | EAN CODE | AVAILABLE | ORDER NO. |
|---|---|---|---|
| Analog din-rail time switch synchron, series Tempus analog | 9004840667189 | | BZ926448 |

# MECHANICAL TIME SWITCH QUARTZ 1NO, 1TE

## SCHRACK INFO

- Analogue time switch
- 1 channel
- Daily program
- Width power reserve (NiMH rechargeable battery)
- 96 switching segments
- Crystal controlled
- Shortest switching time: 15 minutes
- Screw terminals
- Manual switch with 3 positions: Permanent ON/AUTO/continuous OFF
- Switching status display

## TECHNICAL DATA

| | |
|---|---|
| Operating voltage | 230 – 240 V AC |
| Frequency | 50 – 60 Hz |
| Number of channels | 1 |
| Program | Daily program |
| Width | 1 modules |
| Installation type | DIN rail |
| Type of connection | Screw terminals |
| Drive | Quartz-controlled stepper motor |
| Power reserve | 3 days |
| Switching capacity at 250 V AC, cos φ = 1 | 16 A |
| Switching capacity at 250 V AC, cos φ = 0,6 | 4 A |
| Shortest switching times | 15 min |
| Programmable all | 15 min |
| Time accuracy | ≤ ± 1 s/day (Quartz) |
| Type of contact | NO contact |
| Switching output | Potential-free and phase-independent |
| Number of switching segments | 96 |
| Stand-by consumption | 0,5 W |
| Test approval | VDE |
| Housing and insulation material | High-temperature resistant, self-extinguishing thermoplastic |
| Type of protection | IP 20 |
| Protection class | II as per EN 60 730-1 |
| Ambient temperature | -10 °C ... +50 °C |

| DESCRIPTION | EAN CODE | AVAILABLE | ORDER NO. |
|---|---|---|---|
| Mechanical time switch quartz 1NO, 1TE | 9004840680928 | | **BZT26450** |

# ANALOG DIN-RAIL TIME SWITCH SYNCHRON, SERIES TEMPUS ANALOG

## SCHRACK INFO

- Analogue time switch
- 1 channel
- Daily program
- Without power reserve
- Synchronised with mains
- Shortest switching time: 30 minutes
- Simple summer/winter time correction
- Time can be changed clockwise or anti-clockwise
- 48 switching segments
- Screw terminals
- Switching preselection
- Permanent ON/OFF switch
- Switching status display
- Operation control display

## TECHNICAL DATA

| | |
|---|---|
| Operating voltage | 230 V AC |
| Frequency | 50 Hz |
| Number of channels | 1 |
| Program | Daily program |
| Width | 3 modules |
| Installation type | DIN rail |
| Type of connection | Screw terminals |
| Drive | Synchronous motor |
| Switching capacity at 250 V AC, cos φ = 1 | 16 A |
| Switching capacity at 250 V AC, cos φ = 0,6 | 4 A |
| Shortest switching times | 30 min |
| Programmable all | 30 min |
| Time accuracy | Synchronised with mains |
| Type of contact | Changeover contact |
| Switching output | Potential-free and phase-independent |
| Number of switching segments | 48 |
| Stand-by consumption | 1 VA |
| Test approval | VDE |
| Housing and insulation material | High-temperature resistant, self-extinguishing thermoplastic |
| Type of protection | IP 20 |
| Protection class | II as per EN 60 730-1 |
| Ambient temperature | -20 °C ... +50 °C |

## DIMENSIONS

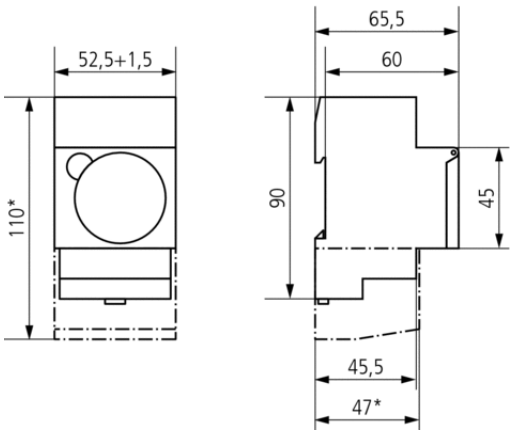


## CONNECTION EXAMPLE

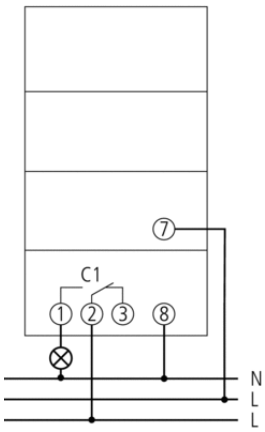


| DESCRIPTION | EAN CODE | AVAILABLE | ORDER NO. |
|---|---|---|---|
| Analog din-rail time switch synchron, series Tempus analog | 9004840667196 | | BZ927031 |

# ANALOG DIN-RAIL TIME SWITCH QUARTZ, SERIES TEMPUS ANALOG

## SCHRACK INFO

- Analogue time switch
- 1 channel
- Daily program
- With power reserve (NiMH rechargeable battery)
- Synchronised with mains
- Shortest switching time: 30 minutes
- Simple summer/winter time correction
- Time can be changed clockwise or anti-clockwise
- 48 switching segments
- Screw terminals
- Switching preselection
- Permanent ON/OFF switch
- Switching status display
- Operation control display

## TECHNICAL DATA

| | |
|---|---|
| Operating voltage | 230 V AC |
| Frequency | 50 – 60 Hz |
| Number of channels | 1 |
| Program | Daily program |
| Width | 3 modules |
| Installation type | DIN rail |
| Type of connection | Screw terminals |
| Drive | Quartz-controlled stepper motor |
| Power reserve | 3 days |
| Switching capacity at 250 V AC, cos φ = 1 | 16 A |
| Switching capacity at 250 V AC, cos φ = 0,6 | 4 A |
| Shortest switching times | 30 min |
| Programmable all | 30 min |
| Time accuracy | ≤ ± 1 s/day (Quartz) |
| Type of contact | Changeover contact |
| Switching output | Potential-free and phase-independent |
| Number of switching segments | 48 |
| Stand-by consumption | 0,1 W |
| Test approval | VDE |
| Housing and insulation material | High-temperature resistant, self-extinguishing thermoplastic |
| Type of protection | IP 20 |
| Protection class | II as per EN 60 730-1 |
| Ambient temperature | -20 °C ... +50 °C |

## DIMENSIONS

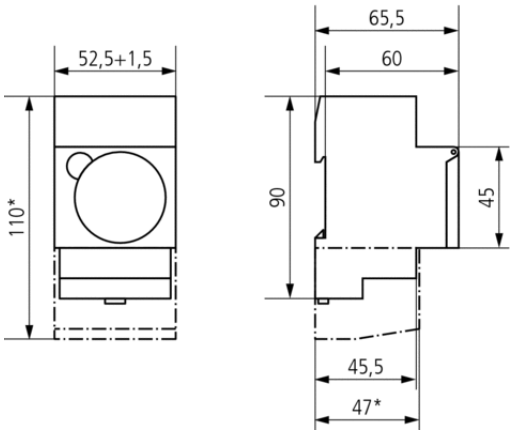


## CONNECTION EXAMPLE

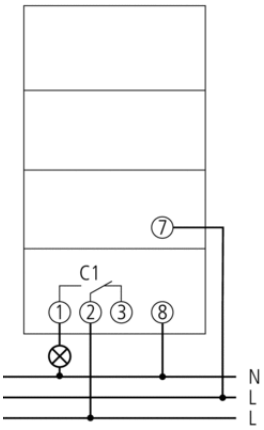


| DESCRIPTION | EAN CODE | AVAILABLE | ORDER NO. |
|---|---|---|---|
| Analog din-rail time switch quartz, series Tempus analog | 9004840667202 | | BZ927131 |

# DIGITAL WEEKLY TIME SWITCH, 1 CO CONTACT, SMALL


## SCHRACK INFO

- Digital time switch with weekly program
- Holiday program
- 1 channel
- Display back light (can be turned off)
- 56 memory locations
- PIN code
- DuoFix spring terminals
- Automatic summer-/winter time changeover
- Text-oriented user interface on the display
- 10 year power reserve (lithium battery)
- ON-OFF switching times
- Switching preselection
- Permanent ON / OFF
- Integrated operating hours counter

## TECHNICAL DATA

| | |
|---|---|
| Operating voltage | 230 V AC |
| Frequency | 50 – 60 Hz |
| Width | 1 module |
| Installation type | DIN-rail |
| Power reserve | 10 years |
| Switching capacity at 250 V AC, cos φ = 1 | 16 A |
| Switching capacity at 250 V AC, cos φ = 0,6 | 4 A |
| Incandescent-/halogen bulb load 230 V | 1000 W |
| Energy-saving lamps 230 V | 7 x 7 W, 6 x 11 W, 5 x 15 W, 5 x 20 W, 5 x 23 W |
| Fluorescent lamp load is not compensated | 800 VA |
| Fluorescent lamp load series compensated | 800 VA |
| Fluorescent lamp load with parallel compensation | 200 VA |
| Shortest switching time | 1 s |
| Time accuracy | ≤ ± 0,5 s/day (Quartz) |
| Stand-by power | 0,4 W |
| Approvals | VDE |
| Type of protection | IP 20 |
| Protection class | II; EN 60 730-1 |
| Ambient temperature | -25 °C ... +55 °C |

## DIMENSIONS

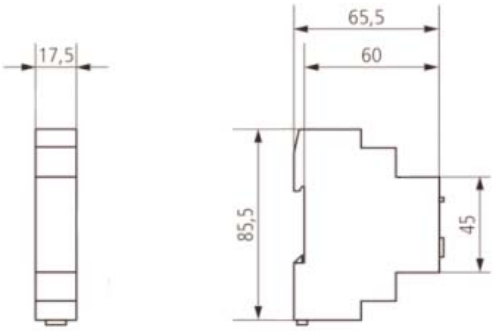


| DESCRIPTION | EAN CODE | AVAILABLE | ORDER NO. |
|---|---|---|---|
| Digital weekly time switch, 1 CO contact, small | 9004840680904 | | BZT26440 |

# DIGITAL DAY/WEEK TIMER 1 CO, 16A


## SCHRACK INFO

- Digital time switch with daily and weekly program
- 1 Channel
- 28 Memories
- User interface with icons on the display
- Screw terminals
- Automatic summer-/winter time changeover
- Permanent ON/OFF
- ON-OFF switching times

## TECHNICAL DATA

| | |
|---|---|
| Operating voltage | 220 – 230 V AC |
| Frequency | 50 – 60 Hz |
| Width | 2 modules |
| Installation type | DIN-rail |
| Power reserve | 3 years |
| Switching capacity at 250 V AC, cos φ = 1 | 16 A |
| Switching capacity at 250 V AC, cos φ = 0,6 | 6 A |
| Incandescent-/halogen bulb load 230 V | 1400 W |
| Energy-saving lamps 230 V | 13 x 7 W, 13 x 11 W, 10 x 15 W, 8 x 23 W |
| Fluorescent lamp load is not compensated | 1400 VA |
| Fluorescent lamp load series compensated | 1400 VA |
| Fluorescent lamp load with parallel compensation | 220 VA |
| Shortest switching time | 1 s |
| Time accuracy | ≤ ± 1 s/day (Quartz) |
| Stand-by power | 4,5 W |
| Approvals | VDE |
| Type of protection | IP 20 |
| Protection class | II; EN 60 730-1 |
| Ambient temperature | -20 °C ... +55 °C |

## WIRING EXAMPLE

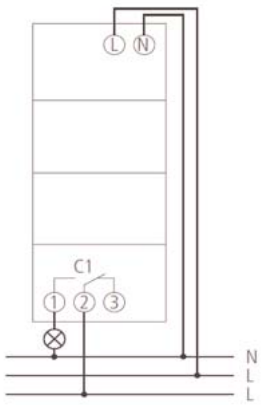


| DESCRIPTION | EAN CODE | AVAILABLE | ORDER NO. |
|---|---|---|---|
| Digital day/week timer 1 CO, 16A | 9004840681031 | | BZT28371 |

# DIGITAL DAY/WEEK TIMER 2 CO, 16A

## SCHRACK INFO

- Digital time switch with daily and weekly program
- 2 channels
- 56 Memories
- User interface with icons on the display
- Screw terminals
- Automatic summer-/winter time changeover
- Permanent ON/OFF
- ON-OFF switching times

## TECHNICAL DATA

| | |
|---|---|
| Operating voltage | 220 – 230 V AC |
| Frequency | 50 – 60 Hz |
| Width | 2 modules |
| Installation type | DIN-rail |
| Power reserve | 3 years |
| Switching capacity at 250 V AC, cos φ = 1 | 16 A |
| Switching capacity at 250 V AC, cos φ = 0,6 | 6 A |
| Incandescent-/halogen bulb load 230 V | 1400 W |
| Energy-saving lamps 230 V | 13 x 7 W, 13 x 11 W, 10 x 15 W, 8 x 23 W |
| Fluorescent lamp load is not compensated | 1400 VA |
| Fluorescent lamp load series compensated | 1400 VA |
| Fluorescent lamp load with parallel compensation | 220 VA |
| Shortest switching time | 1 s |
| Time accuracy | ≤ ± 1 s/day (Quartz) |
| Stand-by power | 4,5 W |
| Approvals | VDE |
| Type of protection | IP 20 |
| Protection class | II; EN 60 730-1 |
| Ambient temperature | -20 °C ... +55 °C |

## WIRING EXAMPLE

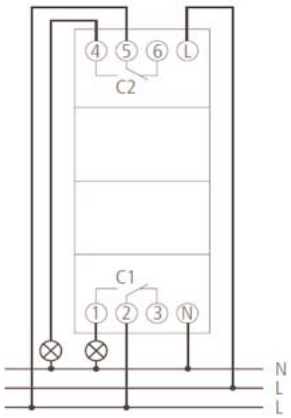


| DESCRIPTION | EAN CODE | AVAILABLE | ORDER NO. |
|---|---|---|---|
| Digital day/week timer 2 CO, 16A | 9004840681048 | | BZT28372 |

## DIGITAL ASTRO-TIMER 1 CO, 16 A


### SCHRACK INFO

- Astronomical time switch with weekly program
- 1 channel
- 54 memory locations
- Astronomical time switch function (automatic calculation of sunrise and sunset times for the whole year)
  - Offset for adjusting of sunrise and sunset times
  - Position data via coordinates or country/city lists can be programmed
  - Fixed ON-OFF switching times can be programmed (e.g. night time interruption)
  - Simulation of switching times (calculated astronomical times and programmed ON/OFF switching times)
  - Reversible astronomical mode (evenings ON - mornings OFF or evenings OFF - mornings ON) or can be deactivated
- DuoFix spring terminals
  - For 2 conductors each
  - Wire or strand (with or without wire end sleeve)
  - Wire diameter: 0.5 - 2.5 mm²
  - Button for releasing plug-in connection
- Text-oriented user guidance in display
  - Preset date and time
  - fully operable without mains connection
- 10 year power reserve (lithium battery)
- Zero-cross switching for relay-saving switching and high lamp loads
- Calculated astronomical switching times
- Programmable ON-OFF switching times
- Switching preselection
- Permanent switching ON/OFF
- Integrated operating hour counter
  - Reset option
  - Service function for monitoring maintenance intervals
- Holiday program
- Display back light (can be turned off)
- PIN coding
- Automatic summer/winter time changeover
  - can be deactivated
  - Date rule options are already stored for Europe, the USA and other countries
  - own date rule options or changeover around set dates are available

### DIMENSIONS

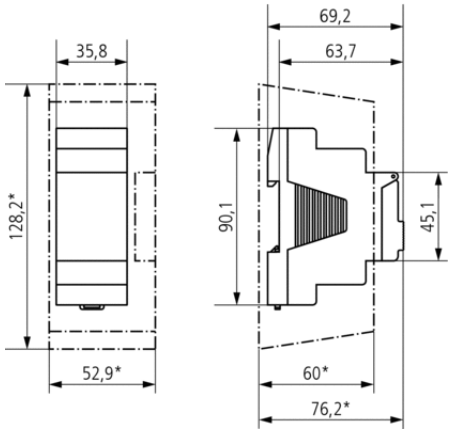


### CONNECTION EXAMPLE

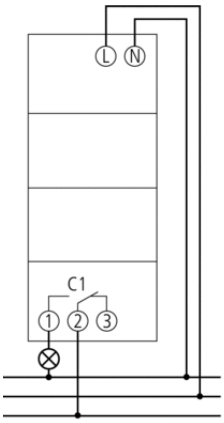

## DIGITAL ASTRO-TIMER 1 CO, 16 A – continued

### TECHNICAL DATA

| | |
|---|---|
| Operating voltage | 230 – 240 V AC |
| Frequency | 50 – 60 Hz |
| Width | 2 modules |
| Installation type | DIN rail |
| Type of contact | Changeover contact |
| Switching output | Potential-free and phase-independent |
| Opening width | < 3 mm (µ) |
| Program | Weekly program, Astronomical program |
| Program functions | ON-OFF |
| Number of channels | 1 |
| Number of memory locations | 54 |
| Power reserve | 10 years |
| Switching capacity at 250 V AC, cos φ = 1 | 16 A |
| Switching capacity at 250 V AC, cos φ = 0,6 | 10 A |
| Incandescent/halogen lamp load 230 V | 2600 W |
| Energy saving lamps 230 V | 22 x 7 W, 18 x 11 W, 16 x 15 W, 16 x 20 W, 14 x 23 W |
| Fluorescent lamp load (conventional) not corrected | 2300 VA |
| Fluorescent lamp load (conventional) series-corrected | 2300 VA |
| Fluorescent lamp load (conventional) parallel-corrected | 730 VA |
| Fluorescent lamp load (electronic ballast) | 400 VA |
| Switching capacity min. | ca. 10 mA |
| Shortest switching times | 1 min |
| Time accuracy | ≤ ± 0.5 s/day (quartz) |
| Time basis | Quartz |
| Stand-by consumption | 0,8 W |
| Test approval | VDE |
| Type of connection | DuoFix spring terminals |
| Keyboards | 4 touch buttons |
| Housing and insulation material | High-temperature resistant, self-extinguishing thermoplastic |
| Type of protection | IP 20 |
| Protection class | II as per EN 60 730-1 |
| Ambient temperature | -30 °C … +55 °C |

| DESCRIPTION | EAN CODE | AVAILABLE | ORDER NO. |
|---|---|---|---|
| Digital Astro-Timer 1 CO, 16 A | 9004840681055 | | **BZT28A71** |

## DIGITAL ASTRO-AND YEAR TIME SWITCH, 2 CO


### SCHRACK INFO

- Digital time switch with yearly and astronomical time program
- Time synchronisation via connection of external DCF or GPS antennas, additional posititioning for astronomical program with GPS (GPS not with 24 V device)
- 2 channels
- 2 external inputs
  - Connectable sensors (external selector switch, sequence timer)
  - Connectable switches (ON or OFF permanent switching)
- Extension module can be connected
- DuoFix spring terminals
  - For 2 conductors each
  - Wire or strand (with or without wire end sleeve)
  - Wire diameter: 0.5 - 2.5 mm²
  - Button for releasing plug-in connection
- Text-oriented user guidance in display
  - Preset date and time
  - fully operable without mains connection
- 800 memory locations
- 10 year power reserve (lithium battery)
- Zero-cross switching for leay-saving switching and high lamp loads
- Automatic summer/winter time changeover
  - can be deactivated
  - Date rule options are already stored for Europe, the USA and other countries
  - own date rule options or changeover around set dates are available
- ON-OFF switching times
- Pulse program
- Cycle program
- Extensive yearly clock functions
  - Basic weekly program and 14 different weekly programs with priority levels and date ranges
  - Permanent ON / permanent OFF with highest priority via date range program option
  - fixed and variable public holidays, public holidays dependent on Easter, day and date ranges with serial pattern
  - Public holiday database for Germany including all Federal states, Switzerland, France etc.
  - Program simulation on clock display
  - Graphic program simulation with 12 month overview for all channels on PC
- Astronomical time switch function (automatic calculation of sunrise and sunset times for the whole year)
  - Offset for adjusting of sunrise and sunset times
  - Position data via coordinates or country/city lists can be programmed
  - Optional production of own city list (favourites) and a table with own astronomical times on PC
  - Fixed ON-OFF switching times can be programmed (e.g. night time interruption)
  - Simulation of astronomical switching times (calculated astronomical times and programmed ON/OFF switching times) for the whole year
  - various astronomical setting options (evening ON - mornings OFF or evenings OFF - mornings ON, astronomical pulse)
- Switching preselection
- Permanent switching ON/OFF
- Count-down timer
- Integrated operating hour counter
  - Reset option
  - Service function for monitoring maintenance intervals
- Holiday program
- 2 random programs
- Display back light (can be turned off)
- PIN coding

### DIMENSIONS

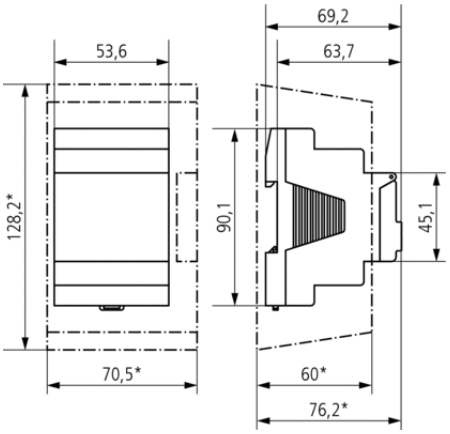


### CONNECTION EXAMPLE

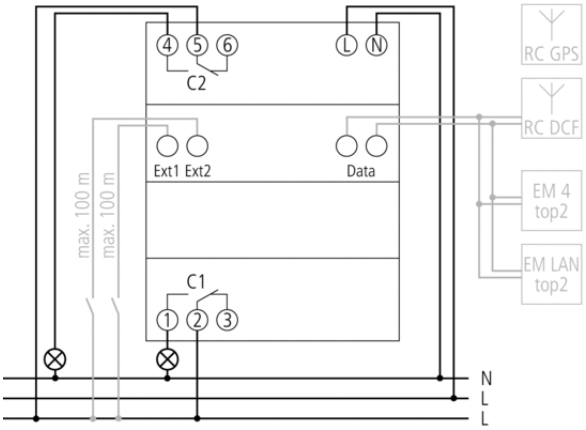

## DIGITAL ASTRO-AND YEAR TIME SWITCH, 2 CO – continued

### TECHNICAL DATA

| | |
|---|---|
| Operating voltage | 110 – 240 V AC |
| Frequency | 50 – 60 Hz |
| Width | 3 modules |
| Installation type | DIN rail |
| Type of contact | Changeover contact |
| Switching output | Phase-independent (Zero-cross switching) |
| Opening width | < 3 mm |
| Program | Yearly program, Astronomical program |
| Program functions | ON-OFF, Pulse, Cycle |
| Number of channels | 2 |
| External inputs | 2 |
| Number of memory locations | 800 |
| Power reserve | 8 years |
| Switching capacity at 250 V AC, cos φ = 1 | 16 A |
| Switching capacity at 250 V AC, cos φ = 0,6 | 10 A |
| Incandescent/halogen lamp load 230 V | 2600 W |
| Incandescent/halogen lamp load 120 V | 700 W |
| Energy saving lamps 230 V | 37 x 7 W, 30 x 11 W, 26 x 15 W, 26 x 20 W, 11 x 23 W |
| Energy saving lamps 120 V | 18 x 7 W, 15 x 11 W, 13 x 15 W, 13 x 20 W, 11 x 23 W |
| Switching capacity min. | ca. 10 mA |
| Shortest switching times | 1 s |
| Time accuracy | ≤ ± 0,5 s/day (quartz) or DCF77/GPS |
| Time basis | Quartz/DCF77/GPS |
| Stand-by consumption | 1,2 W |
| Type of connection | DuoFix spring terminals |
| Keyboards | 4 touch buttons |
| Housing and insulation material | High-temperature resistant, self-extinguishing thermoplastic |
| Type of protection | IP 20 |
| Protection class | II as per EN 60 730-1 |
| Ambient temperature | -30 °C … +55 °C |

| DESCRIPTION | EAN CODE | AVAILABLE | ORDER NO. |
|---|---|---|---|
| Digital astro- and year time switch, 2 CO | 9004840680959 | | BZT27662 |

## DIGITAL ASTRO-AND YEAR TIME SWITCH, 4 CO


### SCHRACK INFO

- Digital time switch with yearly and astronomical time program
- Time synchronisation via connection of external DCF or GPS antennas, additional posititioning for astronomical program with GPS
- 4 channels
- 4 external inputs
  - Connectable sensors (external selector switch, sequence timer)
  - Connectable switches (ON or OFF permanent switching)
- Extension module can be connected
- DuoFix spring terminals
  - For 2 conductors each
  - Wire or strand (with or without wire end sleeve)
  - Wire diameter: 0.5 - 2.5 mm²
  - Button for releasing plug-in connection
- Text-oriented user guidance in display
  - Preset date and time
- Text-oriented user guidance in display
  - Preset date and time
  - fully operable without mains connection
- 800 memory locations
- 10 year power reserve (lithium battery)
- Zero-cross switching for leay-saving switching and high lamp loads
- Automatic summer/winter time changeover
  - can be deactivated
  - Date rule options are already stored for Europe, the USA and other countries
  - own date rule options or changeover around set dates are available
- ON-OFF switching times
- Pulse program
- Cycle program
- Extensive yearly clock functions
  - Basic weekly program and 14 different weekly programs with priority levels and date ranges
  - Permanent ON / permanent OFF with highest priority via date range program option
  - fixed and variable public holidays, public holidays dependent on Easter, day and date ranges with serial pattern
  - Public holiday database for Germany including all Federal states, Switzerland, France etc.
  - Program simulation on clock display
  - Graphic program simulation with 12 month overview for all channels on PC
- Astronomical time switch function (automatic calculation of sunrise and sunset times for the whole year)
  - Offset for adjusting of sunrise and sunset times
  - Position data via coordinates or country/city lists can be programmed
  - Optional production of own city list (favourites) and a table with own astronomical times on PC
  - Fixed ON-OFF switching times can be programmed (e.g. night time interruption)
  - Simulation of astronomical switching times (calculated astronomical times and programmed ON/OFF switching times) for the whole year
  - various astronomical setting options (evening ON - mornings OFF or evenings OFF - mornings ON, astronomical pulse)
- Switching preselection
- Permanent switching ON/OFF
- Count-down timer
- Integrated operating hour counter
  - Reset option
  - Service function for monitoring maintenance intervals
- Holiday program
- 2 random programs
- Display back light (can be turned off)
- PIN coding

### DIMENSIONS

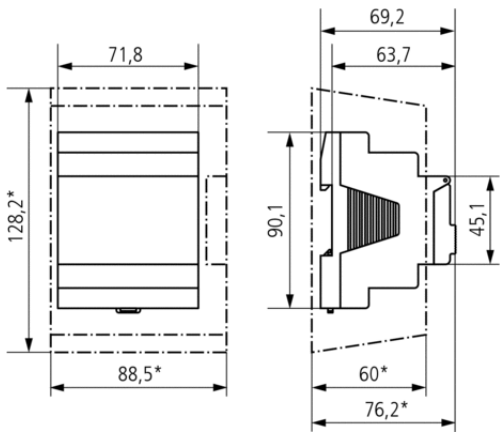


### CONNECTION EXAMPLE

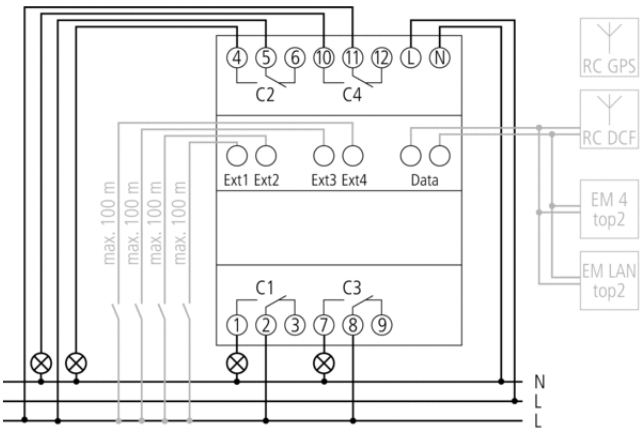

## DIGITAL ASTRO-AND YEAR TIME SWITCH, 4 CO – continued

### TECHNICAL DATA

| | |
|---|---|
| Operating voltage | 110 – 240 V AC |
| Frequency | 50 – 60 Hz |
| Width | 4 modules |
| Installation type | DIN rail |
| Type of contact | Changeover contact |
| Switching output | Phase-independent (Zero-cross switching) |
| Opening width | < 3 mm |
| Program | Yearly program, Astronomical program |
| Program functions | ON-OFF, Pulse, Cycle |
| Number of channels | 4 |
| External inputs | 4 |
| Number of memory locations | 800 |
| Power reserve | 8 years |
| Switching capacity at 250 V AC, cos φ = 1 | 16 A |
| Switching capacity channels 1+3 | 10 A |
| Switching capacity at 250 V AC, cos φ = 0,6 | 10 A |
| Incandescent/halogen lamp load 230 V | 2300 W |
| Incandescent/halogen lamp load 120 V | 1150 W |
| Energy saving lamps 230 V | 37 x 7 W, 30 x 11 W, 26 x 15 W, 26 x 20 W, 11 x 23 W |
| Energy saving lamps 120 V | 18 x 7 W, 15 x 11 W, 13 x 15 W, 13 x 20 W, 11 x 23 W |
| Switching capacity min. | ca. 10 mA |
| Shortest switching times | 1 s |
| Time accuracy | ≤ ± 0,5 s/day (quartz) or DCF77/GPS |
| Time basis | Quartz/DCF77/GPS |
| Stand-by consumption | 1,3 W |
| Type of connection | DuoFix spring terminals |
| Keyboards | 4 touch buttons |
| Housing and insulation material | High-temperature resistant, self-extinguishing thermoplastic |
| Type of protection | IP 20 |
| Protection class | II as per EN 60 730-1 |
| Ambient temperature | -30 °C … +45 °C |

| DESCRIPTION | EAN CODE | AVAILABLE | ORDER NO. |
|---|---|---|---|
| Digital astro- and year time switch, 4 CO | 9004840680966 | | **BZT27664** |

## DIGITAL PHOTOELECTRIC SWITCH, 1 CO


- Analogue adjustable switching brightness
- Adjustable On and Off switching delay
  - to avoid switching errors caused by lightning, car headlights etc. Preset 1 minute
- Switching brightness and switching delay can be set separately for switching On and Off
- Fixed ON and OFF times (e.g. nighttime interruption)
  - can be programmed independent of brightness
- Onscreen display of channel and switching status
- DuoFix spring terminals
  - for 2 conductors per connection terminal
- Zero-cross switching for relay-saving switching and high lamp loads
- Holiday program with yearly function
- Different summer/winter time rules can be selected or freely defined
- Permanent switching ON/OFF
- Test function
  - (Permanent ON) to check the installation independently of set brightness value
- Switching preselection
- Display back light (can be turned off)
- PIN coding
- Operating hours counter (with reminder function)

### SCHRACK INFO

- Twilight switch with integrated weekly timer
- External light sensor included in delivery

### DIMENSIONS

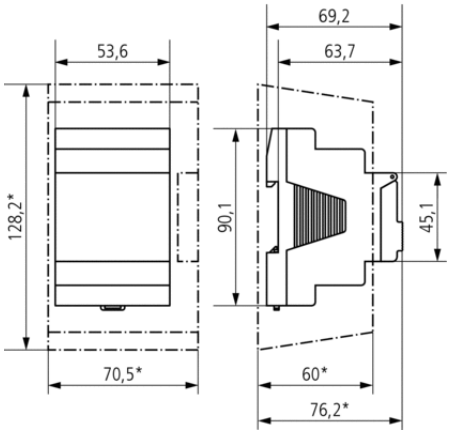


### CONNECTION EXAMPLE

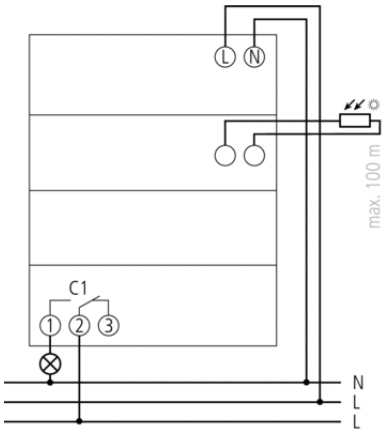

## DIGITAL PHOTOELECTRIC SWITCH, 1 CO – continued

### TECHNICAL DATA

| | |
|---|---|
| Operating voltage | 220 – 240 V AC |
| Frequency | 50 – 60 Hz |
| Number of channels | 1 |
| Number of memory locations | 56 |
| Stand-by consumption | 1,3 W |
| Program | Weekly program |
| Additional program | Holiday program |
| Time basis | Quartz |
| Setting range brightness | 2 – 2000 lx |
| Switch-on delay | 0 – 59 min |
| Switch-off delay | 0 – 59 min |
| Type of contact | Changeover contact |
| Switching output | Potential-free, not for SELV |
| Width | 3 modules |
| Installation type | DIN rail |
| Type of connection | DuoFix spring terminals |
| Keyboards | 4 touch buttons, 1 potentiometer |
| Shortest switching times | 1 min |
| Power reserve | 10 years, at 20 °C |
| Switching capacity | 16 A (at 250 V AC, cos φ = 1), 10 A (at 250 V AC, cos φ = 0.6), 10 AX (Fluorescent lamp load) |
| Switching capacity min. | <10 mA |
| Incandescent lamp load | 2600 W |
| Halogen lamp load | 2600 W |
| Fluorescent lamp load (conventional) not corrected | 2300 VA |
| Fluorescent lamp load (conventional) series-corrected | 2300 VA |
| Fluorescent lamp load (conventional) lead-lag circuit | 2300 VA |
| Fluorescent lamp load (conventional) parallel-corrected | 800 VA, 80 µF |
| Energy saving lamps | 22 x 7 W, 18 x 11 W, 16 x 15 W, 16 x 20 W, 14 x 23 W |
| Fluorescent lamp load (electronic ballast) | 650 VA |
| Test approval | VDE |
| Housing and insulation material | High-temperature resistant, self-extinguishing thermoplastic |
| Ambient temperature | -30 °C … +55 °C |
| Type of protection | IP 20, sensor IP 55 |
| Protection class | II, Sensor III |
| Max. cable length to sensor | 100 m |

| DESCRIPTION | EAN CODE | AVAILABLE | ORDER NO. |
|---|---|---|---|
| Digital photoelectric switch, 1 CO | 9004840680980 | | BZT27731 |

Page 98

## ANALOGUE PHOTOELECTRIC SWITCH, 1 CO, 1 ME

### SCHRACK INFO

- Analogue twilight switch
- External light sensor included in delivery
- Fixed On and Off switching delay
  - to avoid faulty operation caused by lightning, car headlights etc.
- Display of channel and switching status
- Infinitely adjustable switching brightness

### DIMENSIONS

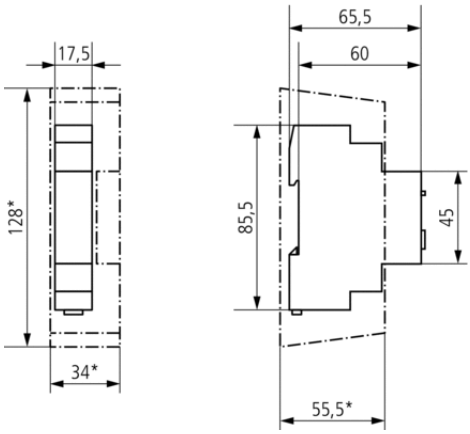


### CONNECTION EXAMPLE

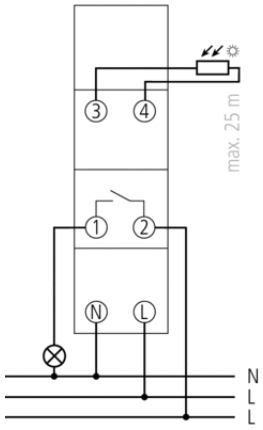

## ANALOGUE PHOTOELECTRIC SWITCH, 1 CO, 1 ME – continued

### TECHNICAL DATA

| | |
|---|---|
| Operating voltage | 220 – 240 V AC |
| Frequency | 50 – 60 Hz |
| Number of channels | 1 |
| Stand-by consumption | 0,8 W |
| Setting range brightness | 2 – 100 lx |
| Switch-on delay | 20 s |
| Switch-off delay | 80 s |
| Type of contact | NO contact |
| Switching output | Potential-free |
| Width | 1 modules |
| Installation type | DIN rail |
| Type of connection | Screw terminals |
| Switching capacity | 16 A (at 250 V AC, cos φ = 1), 10 AX (Fluorescent lamp load) |
| Incandescent lamp load | 2300 W |
| Halogen lamp load | 2300 W |
| Fluorescent lamp load (conventional) not corrected | 2300 VA |
| Fluorescent lamp load (conventional) series-corrected | 2300 VA |
| Fluorescent lamp load (conventional) lead-lag circuit | 2300 VA |
| Fluorescent lamp load (conventional) parallel-corrected | 400 VA, 42 µF |
| Energy saving lamps | 9 x 7 W, 7 x 11 W, 7 x 15 W, 7 x 20 W, 7 x 23 W |
| Fluorescent lamp load (electronic ballast) | 300 VA |
| Test approval | VDE |
| Housing and insulation material | High-temperature resistant, self-extinguishing thermoplastic |
| Ambient temperature | -25 °C … +50 °C |
| Type of protection | IP 20, sensor IP 54 |
| Protection class | II |
| Max. cable length to sensor | 25 m |

| DESCRIPTION | EAN CODE | AVAILABLE | ORDER NO. |
|---|---|---|---|
| Analogue photoelectric switch, 1 CO, 1 ME | 9004840680973 | | BZT27711 |

## WALL PHOTOELECTRIC SWITCH WITH INTEGRATED LIGHT SENSOR

### SCHRACK INFO

- Twilight switch with integrated light sensor
- Fixed On and Off switching delay
  - to avoid faulty operation caused by lightning, car headlights etc.
- Cable feed from the back and from below
  - Cover with snap-on function when opening for the straightforward installation of the device
- Captive screws
- Large terminal area
- Brightness value can be set without opening the device
- Large light exposure angle (approx. 180 degrees)
- Infinitely adjustable switching brightness
- Test button
  - for monitoring installation independent of set brightness value. The button can be accessed without opening the device

### DIMENSIONS

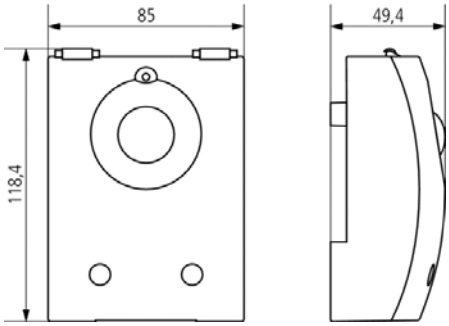


### CONNECTION EXAMPLE

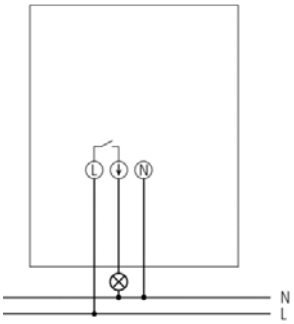

## WALL PHOTOELECTRIC SWITCH WITH INTEGRATED LIGHT SENSOR – continued

### TECHNICAL DATA

| | |
|---|---|
| Operating voltage | 220 – 230 V AC |
| Frequency | 50 – 60 Hz |
| Number of channels | 1 |
| Stand-by consumption | 0,6 W |
| Setting range brightness | 5 – 200 lx |
| Preset brightness value | 15 lx |
| Switch-on delay | 40 s |
| Switch-off delay | 40 s |
| Type of contact | NO contact |
| Switching output | Not potential-free (230 V) |
| Installation type | Wall installation or mast bracket |
| Type of connection | Screw terminals |
| Switching capacity | 16 A (at 230 V AC, cos φ = 1), 10 AX (at 230 V AC, cos φ = 0.3) |
| Incandescent lamp load | 2300 W |
| Halogen lamp load | 2300 W |
| Fluorescent lamp load (conventional) not corrected | 2300 VA |
| Fluorescent lamp load (conventional) series-corrected | 2300 VA |
| Fluorescent lamp load (conventional) lead-lag circuit | 2300 VA |
| Fluorescent lamp load (conventional) parallel-corrected | 400 VA, 42 µF |
| Energy saving lamps | 9 x 7 W, 7 x 11 W, 7 x 15 W, 7 x 20 W, 7 x 23 W |
| Test approval | VDE |
| Housing and insulation material | High-temperature resistant, self-extinguishing thermoplastic |
| Ambient temperature | -35 °C … +55 °C |
| Type of protection | IP 55 |
| Protection class | II |

| DESCRIPTION | EAN CODE | AVAILABLE | ORDER NO. |
|---|---|---|---|
| Wall photoelectric switch with integrated light sensor | 9004840680997 | | **BZT27800** |


HRACK
3/ 3N
7863
N 60898-1
OFF
OFF
OFF
OFF

*The terminal guide for secure connection prevents lines running in wrong places. It is very useful while wiring, but even more importantly, it helps prevent fires by making connections fast and secure.*

# SURGE, LIGHTNING ARRESTERS

## CONTENTS

## LIGHTNING & SURGE ARRESTERS – GENERAL INFORMATION

## REGULATIONS:


Prerequisite for safe use of lightning and surge arresters is testing of the SPDs according to the current device standard: IEC61643-1, EN 61643-11

The Schrack family of surge protection devices (SPDs) is certified to these standards by an independent testing laboratory and thus legitimate bearer of the ÖVE mark.

## SPDS ARE DIVIDED INTO 3 CLASSES

| General designation | Designation according to EN 61643-11 | "Old" designation |
|---|---|---|
| Lightning arrester | Type 1 (abbreviation: T1) | SPD class "B" |
| Surge arrester | Type 2 (abbreviation: T2) | SPD class "C" |
| Fine protection element | Type 3 (abbreviation: T3) | SPD class "D" |

Connection type for TN-S system (zero, PE-N isolated / 4+0)

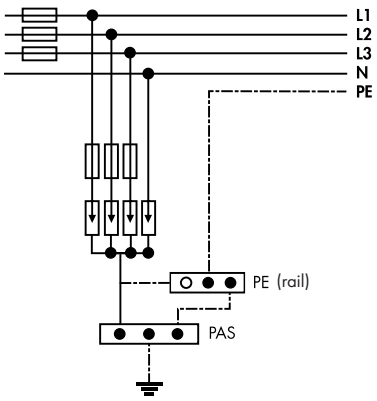


Connection type for TN-C system (zero, PEN conductor / 3+0)

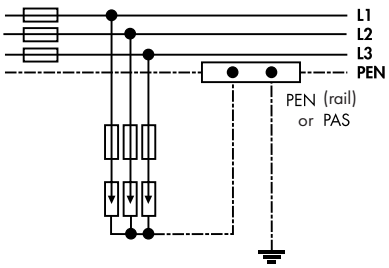


Connection type for TT system (3+1)

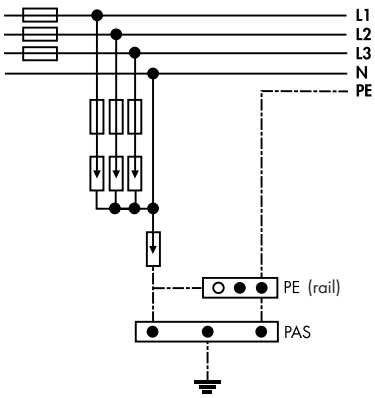


Extract from EN 8001-1/A2

# CLASSIFICATION OF SPDS

## LIGHTNING ARRESTERS T1 I B

T1

So-called lightning arresters are used against direct lightning strikes. The special feature of these SPDs is their lightning current capacity, which has been tested in accordance with the international standard SPD Class I (IEC61643-1). Unlike other SPD types, these SPDs are tested with the curve form 10/350 µs (this curve form meets the requirements for energy and charge). Critical parameters: peak current ($I_{imp}$), specific power, and charge. The comparison shows later that these SPDs can lead many times more energy as opposed to the surge arresters. The Schrack lightning arrester series is tested not only for direct, but also for indirect lightning strikes!



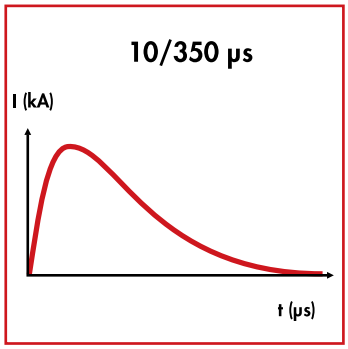


## SURGE ARRESTERS T2 II C

T2

SPDs certified for class II (former classification "C") have no lightning current carrying capacity and therefore may not be used against direct lightning strikes. These SPDs are designed to protect consumer systems against remote strikes (indirect lightning strikes) and voltage surges that are caused by switching operations or other events in the electrical system. The test surge wave for class II SPDs is standardised with the time parameter 8/20 µs and defined by the peak value. The energy carrying capacity of a surge arrester is many times lower than that of a lightning arrester. The chart (comparison of test class I (10/350) and test class II (8/20) curve forms) shows a comparison, where the areas under the curves represent a measure of the energy content at the same current peak value.



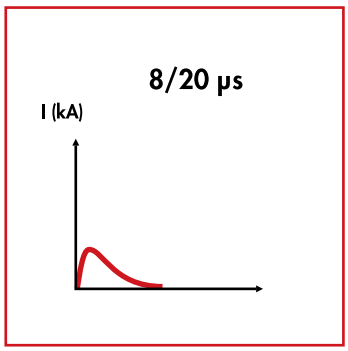

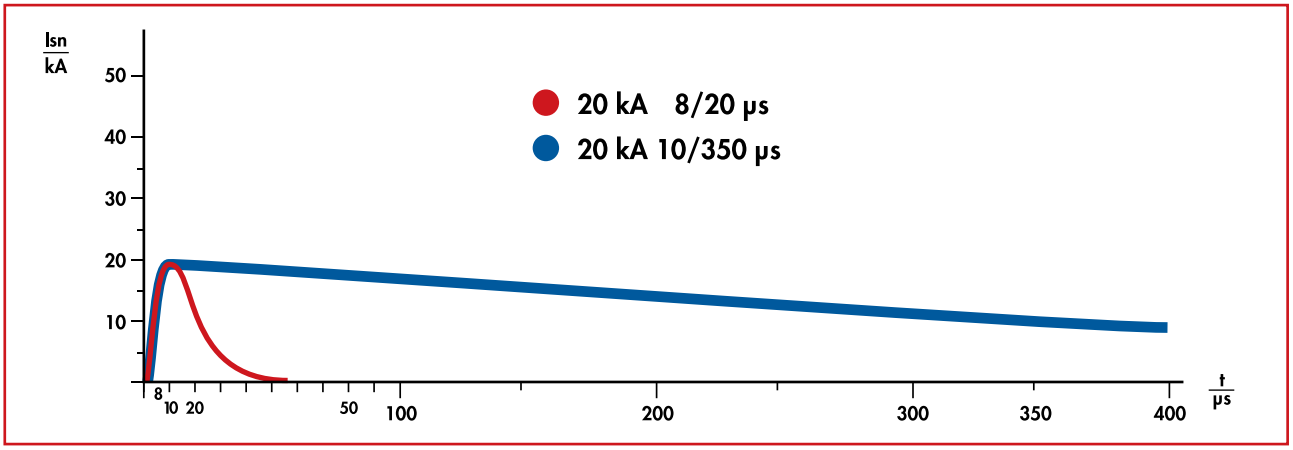


Comparison of test class I (10/350) and test class II (8/20) curve forms

## FINE PROTECTION ELEMENT (EQUIPMENT FINE PROTECTION)

For sensitive end devices, it is necessary to use a coordinated equipment fine protection in addition. This SPD, marked as T3 or III (former classification "D") is validated by means of a hybrid generator and defined by open-circuit voltage $V_{oc}$ and short-circuit current $I_{sc}$. The very low protection level protects sensitive equipment from damage. It is important when using these devices that the line length to the end equipment to be protected may not to exceed 10 m so that the fine protection element can exert its full protective function. A combination with test class I or test class II SPDs allows the greatest possible protection against voltage surges at the end device.



## SELECTION OF POSSIBLE/NECESSARY SPD POSITIONS IN BUILDINGS



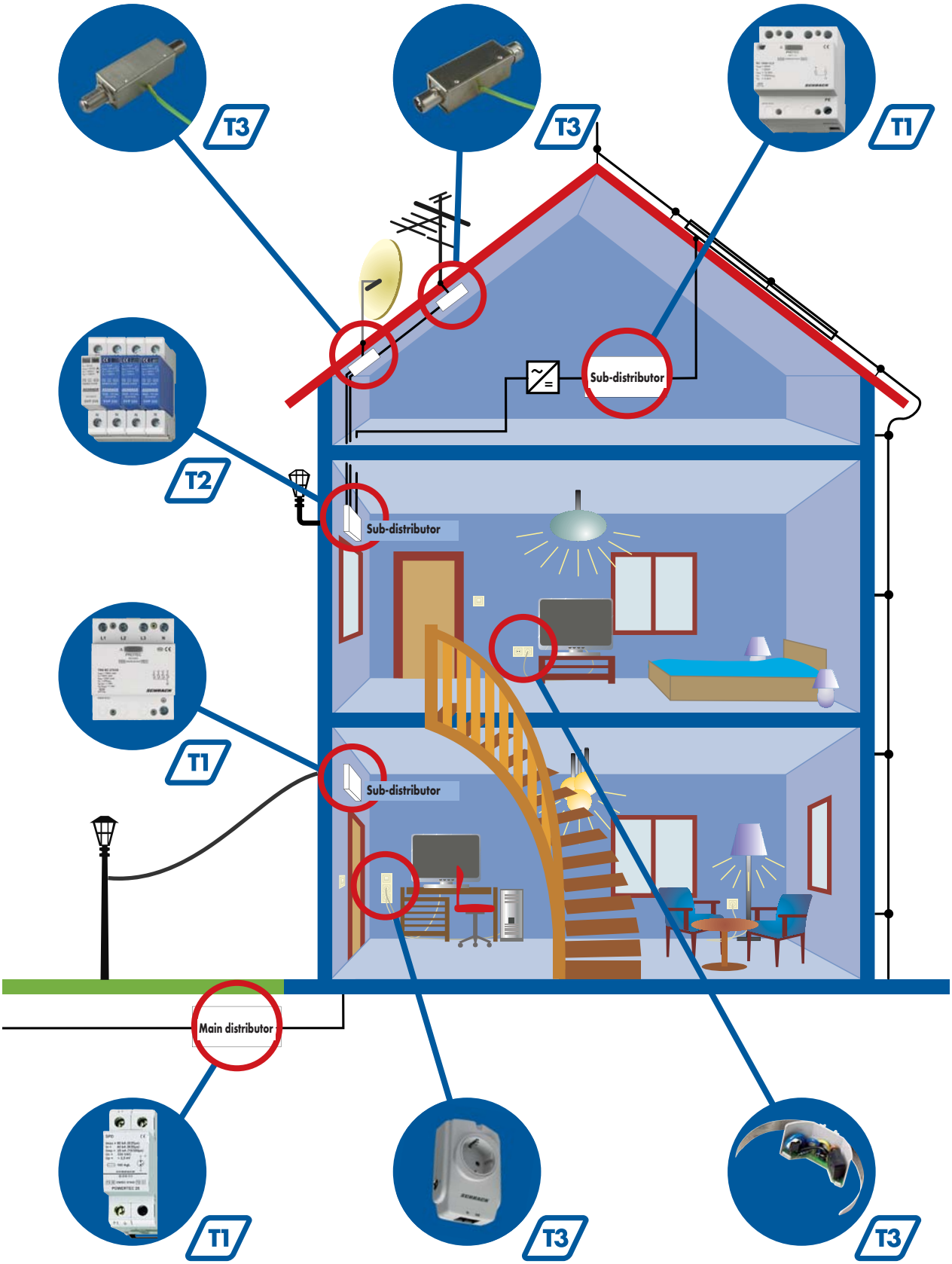

## SCHRACK SELECTION MATRIX FOR SURGE ARRESTERS

Choosing the right SPD is one of the most important topics when it comes to protect your consumer system. With the Schrack surge protection device selection matrix it is possible to find the right SPD quickly and easily.

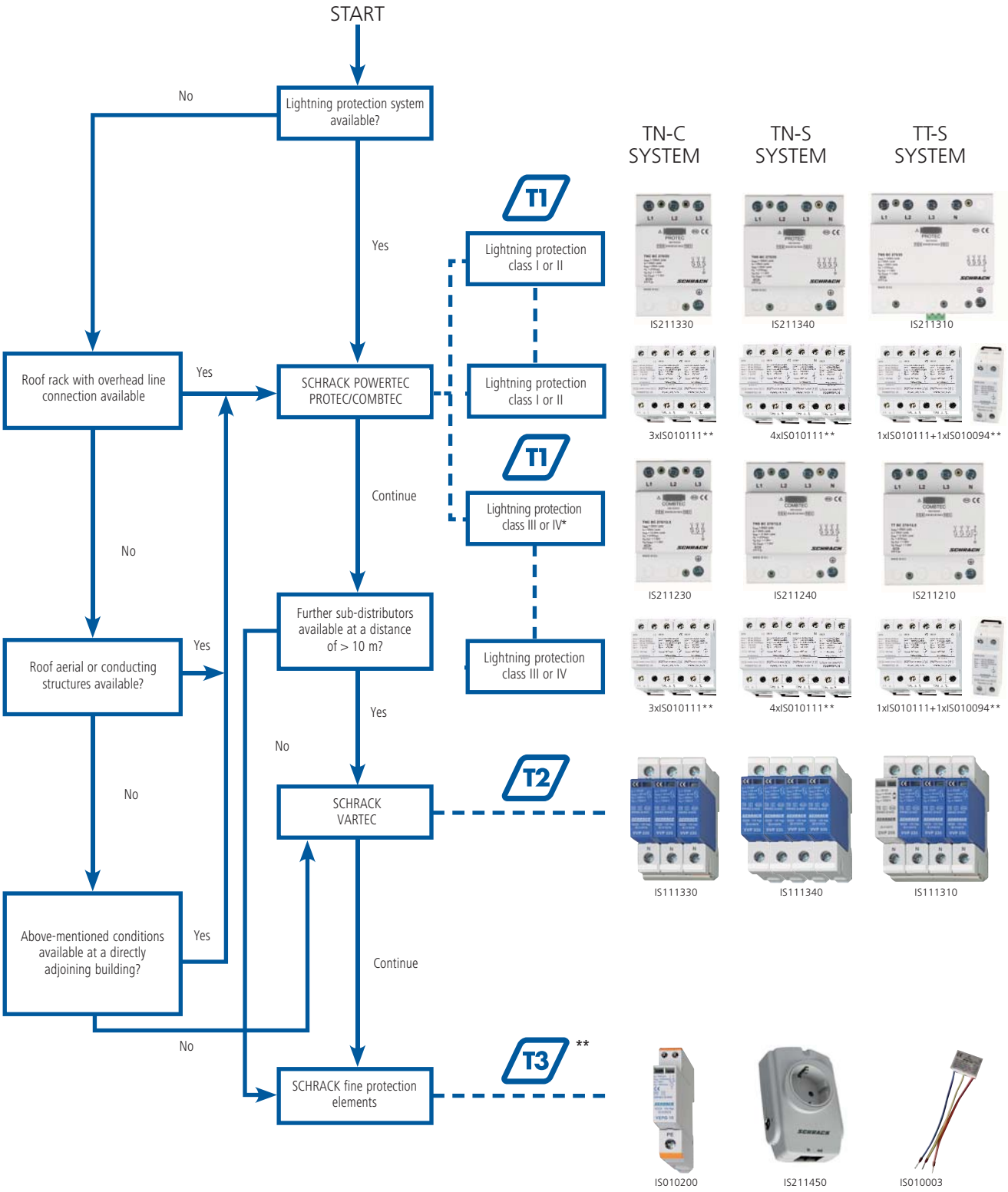


* Not applicable in Austria (ETV), ** Independent from power system

## POWERTEC – LIGHTNING ARRESTERS (TI + TII)


*POWERTEC*

### SCHRACK INFO

The POWERTEC arrester is build in a selective, two-stage technology for special requirements. It is tested to test-class TI and TII (B and C). Through the use of a noble gas-filled, hermetically sealed spark gap the requirement for a high discharge capacity is satisfied. The protection level is low due to the selective, two-stage technology. Because of the encapsulated isolating spark gap no exhaust vent and therefore no safety clearances are necessary.

This special version is primarily designed for the pre-meter in consumer installations. The local installation regulations must be observed during installation.

### TECHNICAL DATA

| Article no. | IS010111, IS010112 | IS010113, IS010114 |
|---|---|---|
| Impulse current $I_{imp}$ | 25kA (10/350) | 25kA (10/350) |
| Charge Q | 12,5As | 30As |
| Specific power W/R | 160kJ/Ω | 900kJ/Ω |
| Version with auxiliary contact | IS010112 | IS010114 |
| Max. continuous voltage $U_c$ | 335VAC | |
| Protection level $U_p$ (at $I_n$) | ≤ 2,5kV | |
| Nominal response voltage | 900 ± 20% | |
| Insulation resistance $R_{isol}$ | > 1010 | |
| Response time | < 50ns | |
| Nominal discharge current In (8/20) | 25kA | |
| Temperature range | - 40°C - + 80°C | |
| Terminal cross section | 50mm² (solid) / 35mm² (fine stranded) | |
| Torque | 4,5 Nm | |
| Cover | Polycarbonate (halogen-free), gray | |
| Degree of protection | IP20 | |
| Mounting | snap on DIN-Rail 35mm (EN50022) | |
| Dimensions | 35 x 67 x 90 mm | |

## POWERTEC – LIGHTNING ARRESTERS (TI + TII) – CONTINUED

### DIMENSIONS AND WIRING DIAGRAM

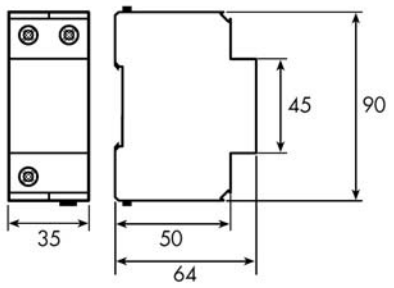


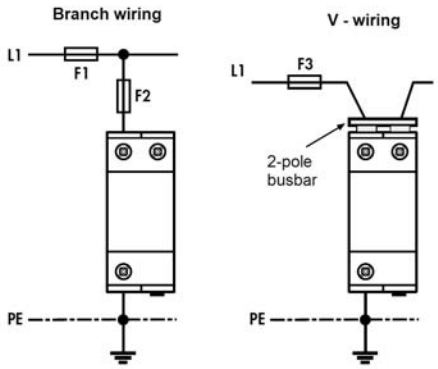


When line fuse (F1) ≤ 160A,
than the back up fuse (F2) is not necessary

| DESCRIPTION | MW | WEIGHT (kg) | EAN CODE | AVIALABLE | ORDER NO. |
|---|---|---|---|---|---|
| Lightning arrester, 25kA, class I/II, B/C | 2 | 0,19 | 9004840268058 | | IS010111 |
| Lightning arrester, 25kA, class I/II, B/C+RC | 2 | 0,19 | 9004840268041 | | IS010112 |
| Lightning arrester, 60kA, class I/II, B/C | 2 | 0,19 | 9004840256000 | | IS010113 |
| Lightning arrester, 60kA, class I/II, B/C+RC | 2 | 0,19 | 9004840268065 | | IS010114 |
| **BUSBARS** | | | | | |
| CU Busbar, 3x for TN-C network, grey, for B/C arrester | | 0,029 | 9004840277944 | | IS010173 |
| CU Busbar, 4x for TN-S-, TT network, grey, for B/C arrester | | 0,04 | 9004840277951 | | IS010174 |

# POWERTEC N/PE – LIGHTNING CURRENT ARRESTERS

POWERTEC N/PE

## SCHRACK INFO

Single-pole N/PE lightning current arrester 50 kA/100 kA (10/350) µs, SG50, G100 correspond to the requirement class TI + TII as protection against lightning currents in the electrical system. The device serves the lightning protection earth bonding in the 400/230 VAC TT-system, as N/PE-arrester in the 3+1 circuit. It is able to dissipate lightning currents up to 50 kA/100 kA (10/350 µs) with a charge of 50 As. By using a hermetically sealed, inert gas-filled high-performance spark gap a dangerous blow-out opening is unnecessary.

A safety distance because of the electric arc is not necessary to other cables and components. Because this trap has to derive high lightning currents, it is recommended to use single-wire copper lines from 16 mm². The total length of the wire must not exceed 0.5 m. Otherwise, the PE pipe should be installed V-shaped with an additional terminal. When required, this surge can be checked by an insulation measurement. If the value of $R_{isol}$ is 0.5 .. 1 MΩ, the arrester should be replaced as soon as possible, if $R_{isol}$ <0.5 mΩ it has to be replaced immediately.

## TECHNICAL DATA

| Article no. | IS010084 | IS010094 |
|---|---|---|
| Impulse current $I_{imp}$ | 50kA (10/350) | 100kA (10/350) |
| Charge Q | 25As | 50As |
| Specific power W/R | 625kJ/Ω | 2500kJ/Ω |
| Rated discharge current (8/20) $I_n$ | 50kA (8/20) | 100kA (8/20) |
| Limited voltage $U_{qs}$ | < 4kV | < 4kV |
| Max. continuous voltage $U_c$ | 255VAC | |
| Protection level Up (at $I_n$) | ≤ 4,0kV | |
| Insulation resistance $R_{isol}$ | > 1010 | |
| 100% Response lightning impulse voltage 1,5/50 | ≤ 4,0kV | |
| Temperature range | - 40°C - + 85°C | |
| Terminal cross section | 50mm² (solid) / 35mm² (fine stranded) | |
| Torque | 4,5 Nm | |
| Cover | Polycarbonate (halogen-free), gray | |
| Degree of protection | IP20 | |
| Mounting | snap on DIN-Rail 35mm (EN50022) | |
| Dimensions | 35 x 64 x 90 mm | |

## DIMENSIONS AND WIRING DIAGRAM

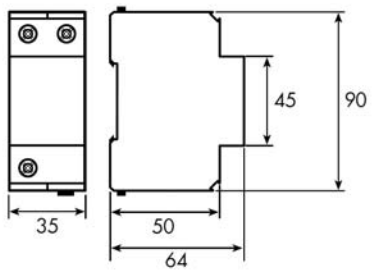


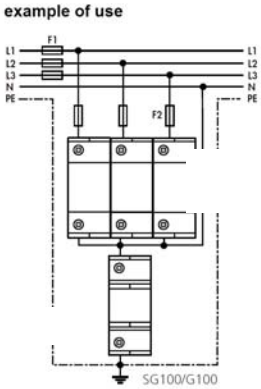



| DESCRIPTION | MW | WEIGHT (kg) | EAN CODE | AVIALABLE | ORDER NO. |
|---|---|---|---|---|---|
| N-PE lightning arrester, 50kA, SG50, class I/B | 2 | 0,226 | 9004840253191 | | IS010084 |
| N/PE Gas surge arrester 100kA, class I/B | 2 | 0,190 | 9004840253207 | | IS010094 |
| **BUSBARS** | | | | | |
| CU Busbar, 4x for TN-C network, grey, for B/C arrester | | 0,04 | 9004840277951 | | IS010174 |

## PROTEC LIGHTNING & SURGE ARRESTERS


PROTEC

### SCHRACK INFO

The Schrack Protec series is a combination of lightning and surge arresters (TI + TII). This series was tested and certified in accordance with IEC/EN 61643. The use of SCHRACK Protec SPDs is necessary in consumer systems that are classified in lightning protection class (hazard level) I or II (25 kA / 19 kA (10/350) per pole). In indoor mounting not dependent on position the national installation regulations must be followed (Austria: ÖVE/ÖNORM E 8001, ÖVE/ÖNORM 8049, ÖVE/ÖNORM EN 62305). The Protec series has been designed such that there is a complete unit for each network system – interconnecting different devices is not necessary. Special rail mounting systems are available for easy rail connection of the SPDs with the residual current circuit breaker.

## TECHNICAL DATA

| | Protec TNC | Protec TNS | Protec TT |
|---|---|---|---|
| Validated according to | Test class I + II (B + C) IEC61643-1/EN 61643-11 | | |
| Max. continuous voltage $U_c$ | 275 $V_{AC}$ (350 $V_{DC}$) | 275 $V_{AC}$ (350 $V_{DC}$) | 275 $V_{AC}$ (350 $V_{DC}$) |
| Impulse current $I_{imp}$ | 25 kA/Pole | 25 kA/Pole | 25 kA/Pole - 100 kA(GDT) |
| Specific power (W/R) | 156 kJ/Ω/Pole | 156 kJ/Ω/Pole | 156 kJ/Ω/Pole - 2,5 MJ/Ω(GDT) |
| Charge Q | 12,5 As/Pole | 12,5 As/Pole | 12,5 As/Pole - 50 As (GDT) |
| Max. discharge current $I_{max}$ (8/20) | 100 kA/Pole | 100 kA/Pole | 100 kA/Pole - 100 kA (GDT) |
| Nominal discharge current $I_n$ (8/20) | 25 kA/Pole | 25 kA/Pole | 25 kA/Pole - 100 kA (GDT) |
| Protection level $U_p$ (at $I_n$) | ≤1,4 kV | ≤1,4 kV | ≤1,5 kV |
| Max. tightening torque | 4,5 Nm | 4,5 Nm | 4.5 Nm |
| Max. back-up fuse | 250 AgL | | |
| Temperature range | -40°C - +80°C | | |
| Terminal cross-section: | 35 mm² (solid) / 25 mm² (finely stranded) | | |
| Mounting | 35 mm DIN rail | | |
| Degree of protection | IP20 | | |
| Dimensions | 54 x 90 x 70 | 72 x 90 x 70 | --- |
| Dimensions with auxiliary contact | 54 x 98 x 70 | 72 x 98 x 70 | 90 x 98 x 70 |

## SCHEMATIC DIAGRAM

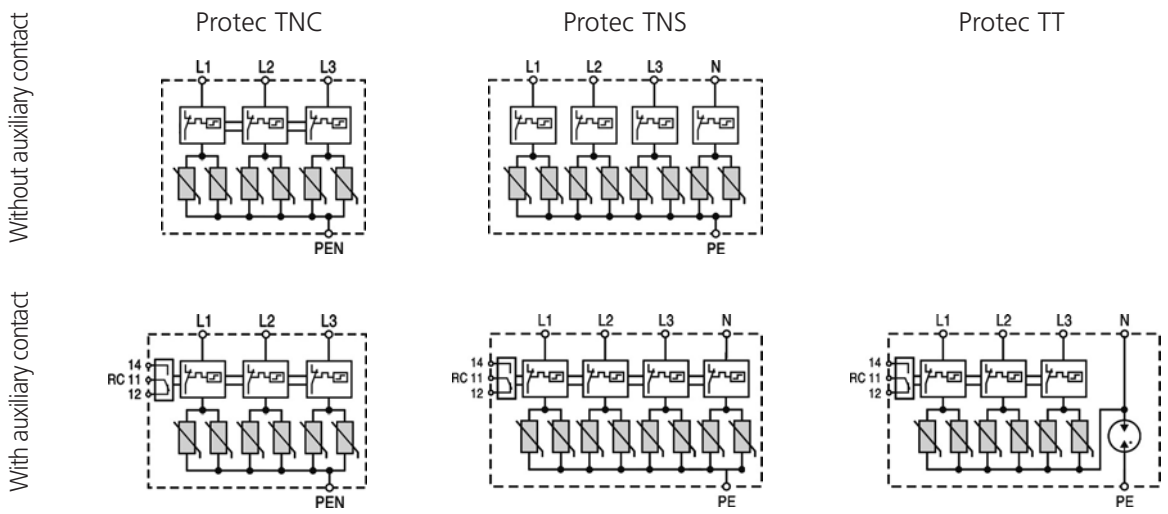

## DIMENSIONS

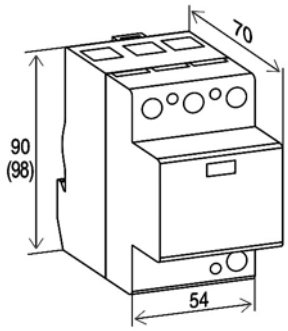


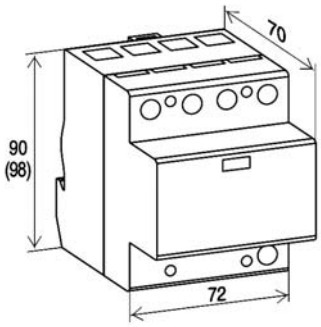


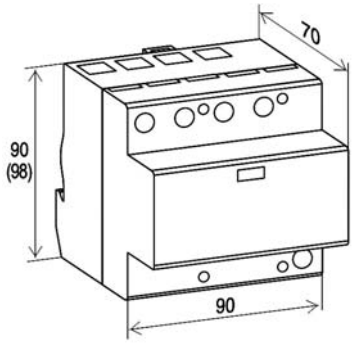


## CONNECTION DIAGRAM

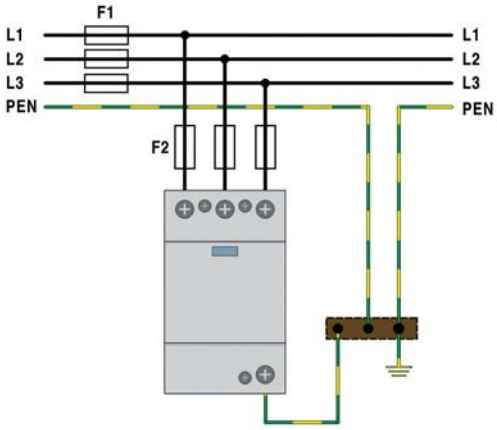


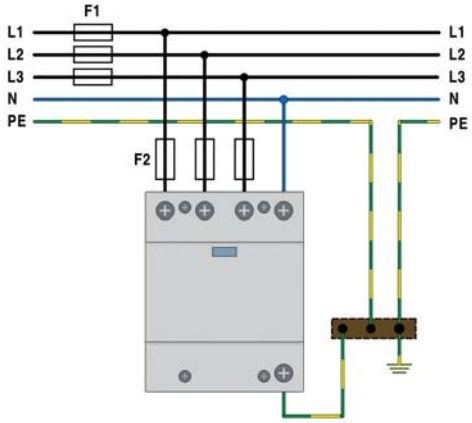


## OTHER

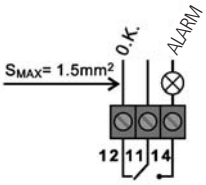


| | |
|---|---|
| A.C. | 250 V / 0.5 A |
| D.C. | 250 V / 0.1 A |
| | 125 V / 0.2 A |
| | 75 V / 0.5 A |

For SPDs with auxiliary contact, the product number ends with "1".


If the colour of the viewing window changes to red, the SPD was overloaded and must be replaced.

| DESCRIPTION | MW | LIGHTNING PROT. | ARRESTER CLASS | Uc | EAN CODE | AVAILABLE | ORDER NO. |
|---|---|---|---|---|---|---|---|
| PROTEC BC TNC 275/25 | 3 | I + II | TI + TI (B + C) | 275 V AC | 9004840553963 | | IS211330 |
| PROTEC BC TNC 275/25 + aux. contact | 3 | I + II | TI + TI (B + C) | 275 V AC | 9004840553987 | | IS211331 |
| PROTEC BC TNS 275/25 | 4 | I + II | TI + TI (B + C) | 275 V AC | 9004840553970 | | IS211340 |
| PROTEC BC TNS 275/25 + aux. contact | 4 | I + II | TI + TI (B + C) | 275 V AC | 9004840553994 | | IS211341 |
| PROTEC BC TT 275/25 + aux. contact | 5 | I + II | TI + TI (B + C) | 275 V AC | 9004840554007 | | IS211311 |
| Busbar UEA (BC) between RCCB 3-pole | 6 | | | | 9004840557091 | | IS050019 |
| Busbar UEA (BC) between RCCB 4-pole | 8 | | | | 9004840557084 | | IS050020 |

## COMBTEC LIGHTNING & SURGE ARRESTERS


COMBTEC

### SCHRACK INFO

The Schrack Combtec series is a combination of lightning and surge arresters (TI + TII). This series was tested and certified in accordance with IEC/EN 61643. The use of SCHRACK Combtec arresters is necessary in consumer systems that are classified in lightning protection class (hazard level) III or IV (12.5 kA (10/350) per pole). In indoor mounting not dependent on position the national installation regulations must be followed (Austria: ÖVE/ÖNORM E 8001, ÖVE/ÖNORM 8049, ÖVE/ÖNORM EN 62305). The Combtex series has been designed such that there is a complete unit for each network system – interconnecting different devices is not necessary. Special rail mounting systems are available for easy rail connection of the SPDs with the residual current circuit breaker.

### TECHNICAL DATA

| | Combtec TNC* | Combtec TNS* | Combtec TT* |
|---|---|---|---|
| Validated according to | Test class I + II + [III] (B + C + [D]) IEC61643-1/EN 61643-11 | | |
| Max. continuous voltage | 275 $V_{AC}$ (350 $V_{DC}$) | 275 $V_{AC}$ (350 $V_{DC}$) | 275 $V_{AC}$ (350 $V_{DC}$) |
| Impulse current $I_{imp}$ (10/350) | 12.5 kA/Pole | 12,5 kA/Pole | 12,5 kA/Pole |
| Specific power (W/R) | 39 kJ/Ω/Pole | 39 kJ/Ω/Pole | 39 kJ/Ω/Pole |
| Charge Q | 6,25 As/Pole | 6,25 As/Pole | 6,25 As/Pole |
| Max. discharge current $I_{max}$ (8/20) | 50 kA/Pole | 50 kA/Pole | 50 kA/Pole |
| Nominal discharge current $I_n$ (8/20) | 20 kA/Pole | 20 kA/Pole | 20 kA/Pole |
| [Combined surge $U_{oc}/I_{sc}$] | [10 kV/5 kA] | [10 kV/5 kA] | [10 kV/5 kA] |
| Protection level $U_p$ (at $I_n$) | ≤1.5kV | ≤1.5kV | ≤1.5kV |
| Max. tightening torque | 4,5 Nm | 4,5 Nm | 4,5 Nm |
| Max. back-up fuse | 250 AgL | | |
| Temperature range | -40 °C -+ 80 °C | | |
| Terminal cross-section | 35 mm² (solid), 25 mm² (finely stranded) | | |
| Mounting | 35 mm DIN rail | | |
| Degree of protection | IP20 | | |
| Dimensions | 54 x 90 x 70 | 72 x 90 x 70 | 72 x 90 x 70 |
| Dimensions with auxiliary contact | 54 x 98 x 70 | 72 x 98 x 70 | 72 x 98 x 70 |

* for max. continuous voltage Uc = 335 V AC versions, change article code to IS210*, all other technical data are identical

### SCHEMATIC DIAGRAM

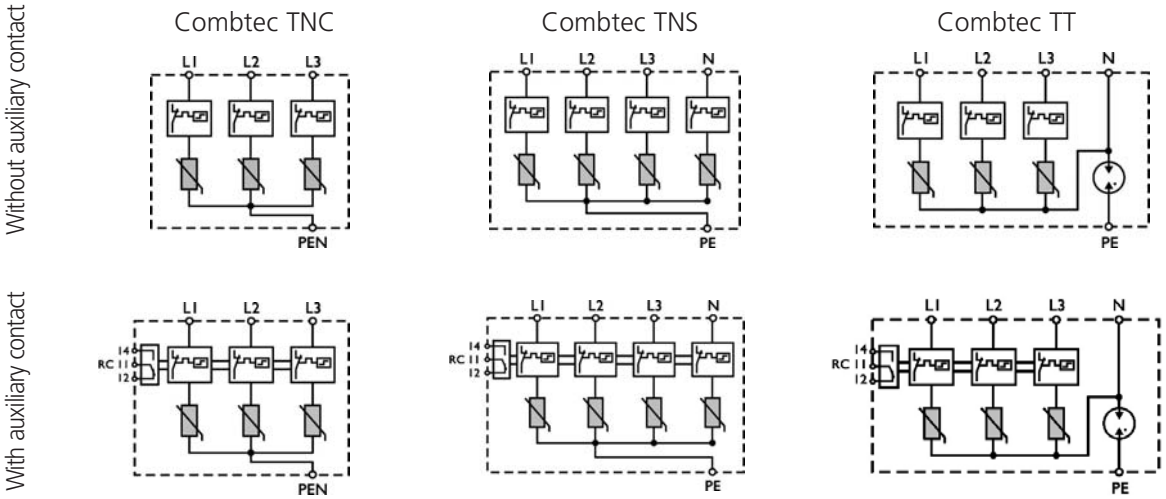

## DIMENSIONS

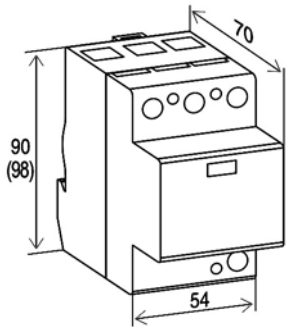


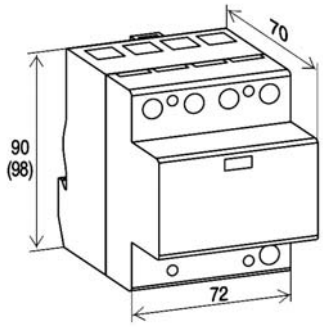


## CONNECTION DIAGRAM

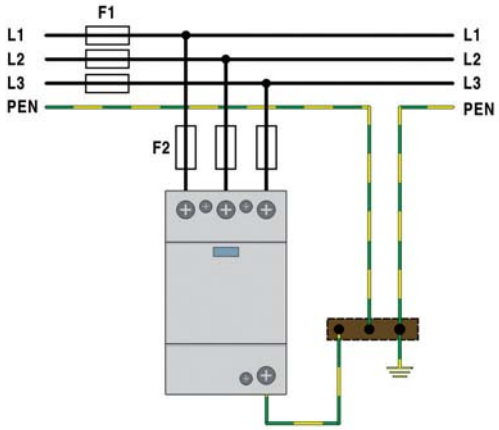


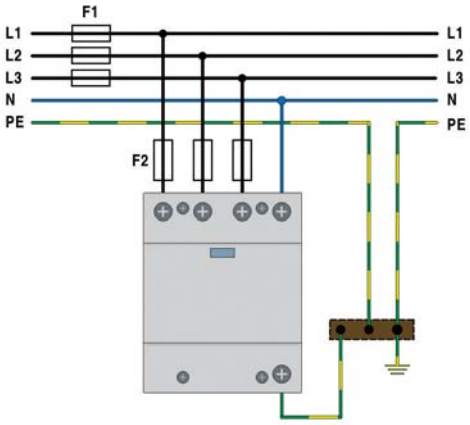


## OTHER

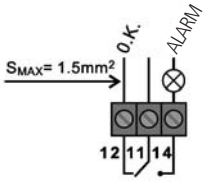


| | |
|---|---|
| A.C. | 250 V / 0.5 A |
| D.C. | 250 V / 0.1 A |
| | 125 V / 0.2 A |
| | 75 V / 0.5 A |

For SPDs with auxiliary contact, the product number ends with "1".


If the colour of the viewing window changes to red, the SPD was overloaded and must be replaced.

| DESCRIPTION | MW | LIGHTNING PROT. | ARRESTER CLASS | Uc | EAN CODE | AVAILABLE | ORDER NO. |
|---|---|---|---|---|---|---|---|
| COMBTEC BC TNC 275/12.5 | 3 | III + (IV) | TI + TII (B+C) | 275 V AC | 9004840554014 | | IS211230 |
| COMBTEC BC TNC 275/12.5 + aux. contact | 3 | III + (IV) | TI + TII (B+C) | 275 V AC | 9004840554045 | | IS211231 |
| COMBTEC BC TNS 275/12.5 | 4 | III + (IV) | TI + TII (B+C) | 275 V AC | 9004840554021 | | IS211240 |
| COMBTEC BC TNS 275/12.5 + aux. contact | 4 | III + (IV) | TI + TII (B+C) | 275 V AC | 9004840554052 | | IS211241 |
| COMBTEC BC TT 275/12.5 | 4 | III + (IV) | TI + TII (B+C) | 275 V AC | 9004840554038 | | IS211210 |
| COMBTEC BC TT 275/25 + aux. contact | 4 | III + (IV) | TI + TII (B+C) | 275 V AC | 9004840554069 | | IS211211 |
| COMBTEC BCD TNC 275/12.5 + aux. contact | 3 | III + (IV) | TI + TII + TIII (B+C+D) | 275 V AC | 9004840554076 | | IS211431 |
| COMBTEC BCD TNS 275/12.5 + aux. contact | 4 | III + (IV) | TI + TII + TIII (B+C+D) | 275 V AC | 9004840554083 | | IS211441 |
| COMBTEC BCD TT 275/12.5 + aux. contact | 4 | III + (IV) | TI + TII + TIII (B+C+D) | 275 V AC | 9004840554090 | | IS211411 |
| Busbar UEA (BC) between RCCB 3-pole | 6 | | | | 9004840557091 | | IS050019 |
| Busbar UEA (BC) between RCCB 4-pole | 8 | | | | 9004840557084 | | IS050020 |

## VARTEC SURGE ARRESTERS

VARTEC

### SCHRACK INFO

The Schrack Vartec series is a pure surge arrester series (TII). This series was tested and certified in accordance with IEC/EN 61643. The use of SCHRACK Vartec arresters is necessary in every consumer installation, which is newly built or significantly altered. In indoor mounting not dependent on position the national installation regulations must be followed (Austria: ÖVE/ÖNORM E 8001). Through their plug-in design, these arresters are very easy to replace in the case of an overload to an arrester.

### TECHNICAL DATA

| Description<br>Order No. | VGM-20<br>IS010350 | VVM 255-15<br>IS010351 | VVM 255-20<br>IS010352 | VVM 320-15<br>IS010353 | VVM 320-20<br>IS010354 |
|---|---|---|---|---|---|
| SPD continuous voltage | 255VAC | 255VAC | 255VAC | 320VAC | 320VAC |
| Nominal discharge current (8/20) $I_n$ | 20kA (8/20) | 15kA (8/20) | 20kA (8/20) | 15kA (8/20) | 20kA (8/20) |
| Max. discharge current (8/20) $I_{max}$ | 40kA (8/20) | 30kA (8/20) | 40kA (8/20) | 30kA (8/20) | 40kA (8/20) |
| Protection level $U_p$ | ≤ 1,5kV | ≤ 1,5kV | ≤ 1,5kV | ≤ 1,5kV | ≤ 1,5kV |
| Residual voltage at 5kA (8/20) $U_{res}$ | - | ≤ 1,1kV | ≤ 1,1kV | ≤ 1,1kV | ≤ 1,1kV |
| Follow current $I_{fi}$ | 100Arms | - | - | - | - |
| Response time $t_A$ | 100ns | 25ns | | | |
| Thermal disconnection | No | Yes | | | |
| Back up fuse | - | max. 125AgL | | | |
| Short circuit withstand $I_{sccr}$ | - | 25kA/50Hz | | | |
| Tested acc. to | IEC/EN 61643-11 | | | | |
| Housing material | Thermoplastic; UL 94V-0 | | | | |
| Temperature range | -40°C - +80°C* | | | | |
| Width (DIN43880) | 1TE | | | | |
| Dimensions (mm) | 17,7 x 61 x 47 | | | | |
| Weight (g) | 50 | 55 | | | |
| Mounting | Vartec base VGM | Vartec base VVM | | | |
| Encoding | Yes | | | | |
| Failure indicator | Yes | | | | |

### DIMENSIONS AND CIRCUIT DIAGRAMS

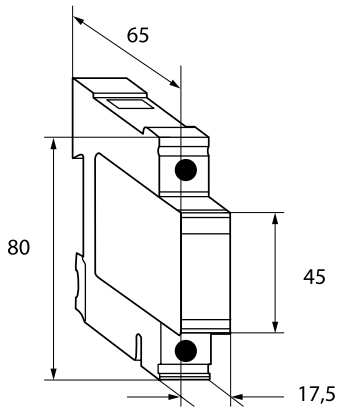


VVP 255/355

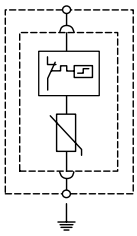

DVP 255

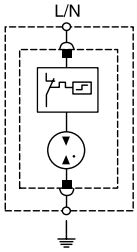


VVP 255/355
with auxiliary switch

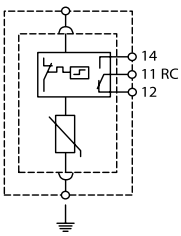


DVP 255
with auxiliary contact

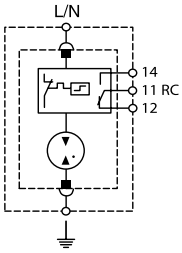

## CIRCUIT DIAGRAMS

### TN-C MAINS SYSTEM

Zeroing

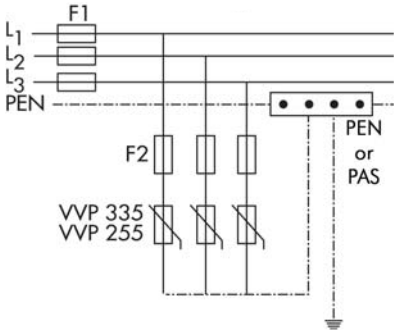


### TN-S MAINS SYSTEM

Zeroing

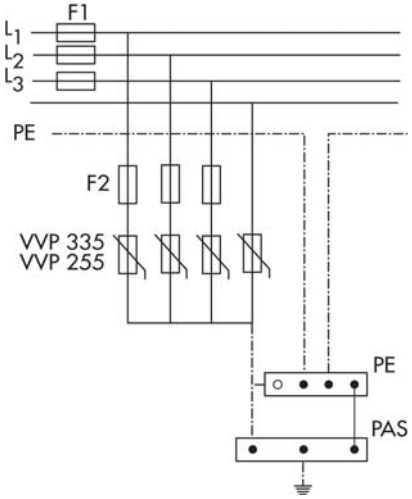


### TN-C/TT-/IT MAINS SYSTEM

Zeroing
Residual-current protective circuit
Insulation monitoring system

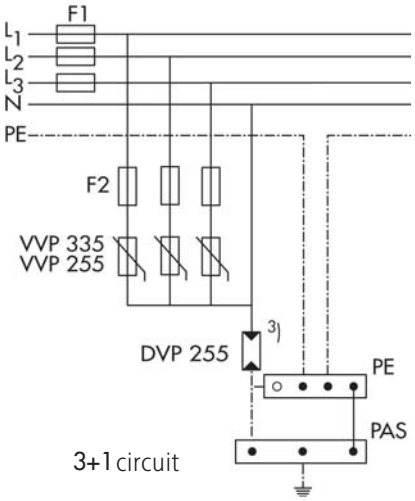


## OTHER

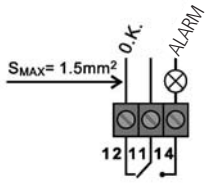


| | |
|---|---|
| A.C. | 250 V / 0.5 A |
| D.C. | 250 V / 0.1 A |
| | 125 V / 0.2 A |
| | 75 V / 0.5 A |

For SPDs with auxiliary contact, the product number ends with "1".


If the colour of the viewing window changes to red, the SPD was overloaded and must be replaced.

| DESCRIPTION | Uc | EAN CODE | AVAILABLE | ORDER NO. |
|---|---|---|---|---|
| **MODULES** | | | | |
| VVM-Module TII, 255V/15kA | 255 VAC | 9004840779509 | | IS010351 |
| VVM-Module TII, 255V/20kA | 255 VAC | 9004840779516 | | IS010352 |
| VVM-Module TII, 320V/15kA | 320 VAC | 9004840779523 | | IS010353 |
| VVM-Module TII, 320V/20kA | 320 VAC | 9004840779530 | | IS010354 |
| VGM-Module TII, 20kA | 255 VAC | 9004840779493 | | IS010350 |
| **BASE** | | | | |
| Base 1p. for VVM-Module | | 9004840779356 | | IS010310 |
| Base 1p. + aux. contact for VVM-Module | | 9004840779363 | | IS010311 |
| Base 1p. for VGM-Module | | 9004840779370 | | IS010312 |
| Base TII, 1+1, without aux. contact | | 9004840779394 | | IS010320 |
| Base TII, 1+1, with aux. contact | | 9004840779400 | | IS010321 |
| Base TII, 2+0, without aux. contact | | 9004840779417 | | IS010322 |
| Base TII, 2+0, with aux. contact | | 9004840779424 | | IS010323 |
| Base TII, 3+0, without aux. contact | | 9004840779431 | | IS010330 |
| Base TII, 3+0, with aux. contact | | 9004840779448 | | IS010331 |
| Base TII, 3+1, without aux. contact | | 9004840779455 | | IS010340 |
| Base TII, 3+1, with aux. contact | | 9004840779462 | | IS010341 |
| Base TII, 4+0, without aux. contact | | 9004840779479 | | IS010342 |
| Base TII, 4+0, with aux. contact | | 9004840779486 | | IS010343 |

## FINE PROTECTION ELEMENTS


IS010200

### SCHRACK INFO

Schrack rail-mounted fine protection element (T3) for indoor mounting for the protection of single-phase consumer systems against transient overvoltages. With two protection paths in 1 MW, this Schrack fine protection element is ideal for space-saving installation in small distribution boxes or other DIN rail enclosures. The plug-in design allows easy replacement of the module in case of any overloading of the arrester.

### TECHNICAL DATA

| | VMG 275 |
|---|---|
| SPD continuous voltage $U_c$ | 275 $V_{AC}$ |
| Nominal discharge current $I_n$ (8/20) | 3 kA / Pole |
| $U_{oc}$ (1.2/50) | 6 kV / Pole |
| Protection level $U_p$ (la $I_n$) | ≤0.9 kV |
| Response time $t_a$ | <100 ns |
| Max. permissible ambient temperature | -40 °C ...+80 °C |
| Degree of protection open/installed | IP20 / 40 |
| Max. permissible back-up fuse | 63 A |
| Max. terminal cross-section | L, N = 6 mm²; PE = 25/35 mm² |
| Auxiliary switch (optional) | 250 $V_{AC}$ / 0.5 A; max. 1.5 mm² |

### DIMENSIONS AND CIRCUIT DIAGRAMS

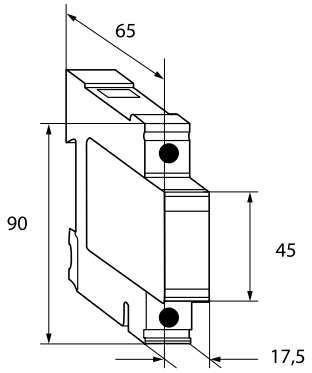


Internal circuit diagram

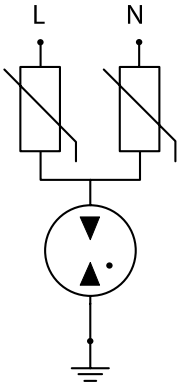


Schematic diagram

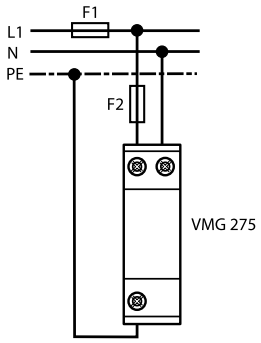


F2 only necessary if F1> 63 AgL

| DESCRIPTION | MW | ARRESTER CLASS | $U_c$ | EAN CODE | AVAILABLE | ORDER NO. |
|---|---|---|---|---|---|---|
| D-arr. module 3 kA, VMG | 1 | TIII (D) | 275 VAC | 9004840250657 | | IS010200 |
| Base 1-pole for VMG / VEPG | 1 | | | 9004840250664 | | IS010201 |
| Base 1-pole + aux. contact for VMG / VEPG | 1 | | | 9004840250671 | | IS010202 |

# FINE PROTECTION ELEMENTS – FLUSH-MOUNTED BOX AND ADAPTER PLUG

IS211450/IS010002/IS010003

## SCHRACK INFO

Schrack fine protection elements for flush-mounted boxes are suitable for installation of new and retrofitting existing earthed socket outlets. Through-wiring in the IS010002 enables the connection of additional socket outlets. In case of overload, the built-in signal transmitter signals a defective device. The power supply of end devices is maintained. The Schrack fine protection adapter plug is Ideal for retrofitting a test class 3 arrester for sensitive end devices. The combined protection of power lines and data lines with F-port (TV aerial) or telephone line connection (RJ11) protects all important feed lines to TV set or phone line. Installation always in combination with Protec, Combtec or Vartec arresters!

## TECHNICAL DATA

| | Flush-mounted box SPD | | Adapter plug |
|---|---|---|---|
| | IS010002 | IS010003 | IS211450 |
| Validated according to | Test class III (D) IEC61643-1/EN 61643-11 | | |
| Through-wiring | YES | NO | NO |
| Max. continuous voltage $U_c$ | 255 $V_{AC}$ | | 275 $V_{AC}$ |
| Combined surge $U_{oc}/I_{sc}$ | 4 kV / 2,5 kA | 6 kV / 3 kA | 6 kV / 3 kA |
| Max. input power | - | - | 3500 VA |
| Protection level $U_p$ (la $I_n$ /L-N ) | <0,9 kV | <0,8 kV | <1.25 kV |
| Max. back-up fuse | 16 AgL/gG | | |
| Temperature range | -0 °C - + 40 °C | | |
| Terminal cross-section | 2,5² | 1,5² | - |
| Signalling | Buzzer | Buzzer | LED display |
| Child safety lock | - | - | YES |

## MOUNTING / DIMENSIONS / SCHEMATIC MOUNTING – FLUSH-MOUNTED BOX

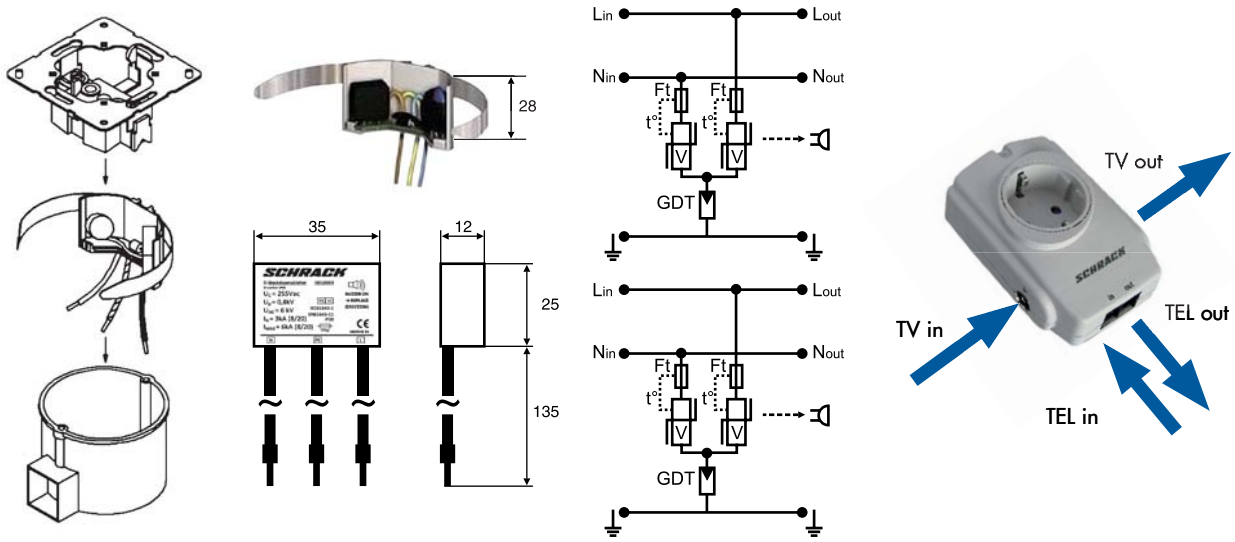


| DESCRIPTION | ARRESTER CLASS | Uc | EAN CODE | AVAILABLE | ORDER NO. |
|---|---|---|---|---|---|
| Adapter plug 230 VAC /16A | TIII (D) | 275 V AC | 9004840585919 | | IS211450 |
| D-Base outlet arrester 2.5 kA, through-wiring | TIII (D) | 255 V AC | 9004840255911 | | IS010002 |
| D-Base outlet arrester 2.5 kA | TIII (D) | 255 V AC | 9004840532432 | | IS010003 |

# LIGHTNING- & SURGE ARRESTER FOR PHOTOVOLTAIC SYSTEM

IS011110

## SCHRACK INFO

The SCHRACK PHOTEC series has been developed specifically for the protection of photovoltaic systems and protects them from direct and indirect lightning strikes and power surges. Through proper installation of these surge arresters, the photovoltaic system is protected in areas of lightning protection class (risk level) III and IV. By using 2 terminals per protected pole, a secure connection of cables and equipment can be implemented with ease. The combination of lightning and surge arrester requires no additional arresters between the photovoltaic panels and inverters.

## TECHNICAL DATA

| | PHOTEC BC 1000 | PHOTEC BC 550 |
|---|---|---|
| Validated according to | Test class I + II (B + C) IEC61643-1/EN 61643-11 | |
| Max. continuous voltage | 1000 $V_{DC}$ | 550 $V_{DC}$ |
| Impulse current $I_{imp}$ (10/350) | 12,5 kA/Pole | 12,5 kA/Pole |
| Max. discharge current $I_{max}$ (8/20) | 40 kA/Pole | 40 kA/Pole |
| Nominal discharge current $I_n$ (8/20) | 20 kA/Pole | 20 kA/Pole |
| Protection level $U_p$ (at $I_n$) | ≤2.25 kV | ≤2.0 kV |
| Max. tightening torque | 4.5 Nm | 4.5 Nm |
| Max. back-up fuse | 250 AgL | |
| Temperature range | -40 °C - + 80 °C | |
| Terminal cross-section | 35 mm² (solid) / 25 mm² (finely stranded) | |
| Mounting | 35 mm DIN rail | |
| Degree of protection | IP20 | |
| Dimensions | 72 x 90 x 70 | 72 x 90 x 70 |
| Dimensions with auxiliary contact | 72 x 98 x 70 | 72 x 98 x 70 |

## SCHEMATIC STRUCTURE / SAMPLE APPLICATION

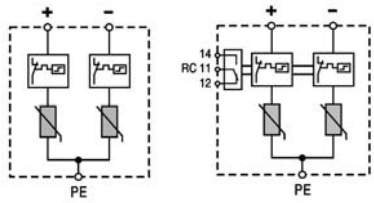


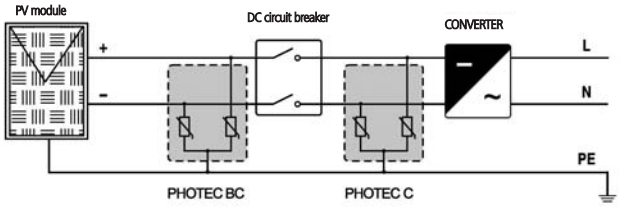


## OTHER

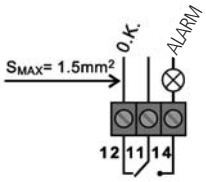


| | |
|---|---|
| A.C. | 250 V / 0.5 A |
| D.C. | 250 V / 0.1 A |
| | 125 V / 0.2 A |
| | 75 V / 0.5 A |

For SPDs with auxiliary contact, the product number ends with "1".


If the colour of the viewing window changes to red, the SPD was overloaded and must be replaced.

| DESCRIPTION | MW | LIGHTNING PROT. ARRESTER CLASS | | $U_C$ | EAN CODE | AVAILABLE | ORDER NO. |
|---|---|---|---|---|---|---|---|
| PHOTEC BC 1000/12.5 | 4 | III + IV | TI + TI (B + C) | 1000 V DC | 9004840547610 | | IS011110 |
| PHOTEC BC 1000/12.5 + aux. contact | 4 | III + IV | TI + TI (B + C) | 1000 V DC | 9004840547627 | | IS011111 |
| PHOTEC BC 550/12.5 | 4 | III + IV | TI + TI (B + C) | 550 V DC | 9004840547597 | | IS011150 |
| PHOTEC BC 550/12.5 + aux. contact | 4 | II + IV | TI + TI (B + C) | 550 V DC | 9004840547603 | | IS011151 |

## SURGE ARRESTER FOR PHOTOVOLTAIC SYSTEMS

IS011252

### SCHRACK INFO

This SCHRACK PHOTEC series has been developed specifically for the protection of photovoltaic systems and protects them from direct and indirect lightning strikes and power surges. Through proper installation of these surge arresters, the photovoltaic system is protected against transient overvoltages. The plug-in design of the overvoltage protection modules allows easy replacement in case of an overload. The modules must not be replaced under load! Be sure to follow the national installation regulations.

## TECHNICAL DATA

| | PHOTEC C 1000 | PHOTEC C 550 |
|---|---|---|
| Validated according to | Test class II (C) IEC61643-1/EN 61643-11 | |
| Max. continuous voltage | 1000 $V_{DC}$ | 550 $V_{DC}$ |
| Max. discharge current $I_{max}$ (8/20)) | 40 kA/ Pole | 40 kA/ Pole |
| Nominal discharge current $I_n$ (8/20) | 20 kA/ Pole | 20 kA/ Pole |
| Protection level $U_p$ (at $I_n$) | ≤4 kV | ≤2.1 kV |
| Max. tightening torque | 4.5 Nm | 4.5 Nm |
| Max. back-up fuse | 125 AgL | |
| Temperature range | -40 °C - + 80 °C | |
| Terminal cross-section | 35 mm² (solid) / 25 mm² (finely stranded) | |
| Mounting | 35 mm DIN rail | |
| Degree of protection | IP20 | |
| Dimensions | 54 x 90 x 72 | 36 x 90 x 72 |
| Dimensions with auxiliary contact | 54 x 98 x 72 | 36 x 98 x 72 |

## SCHEMATIC STRUCTURE / SAMPLE APPLICATION

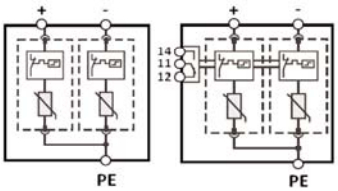


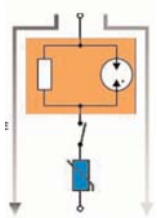

## OTHER

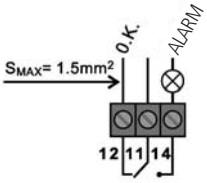


| | |
|---|---|
| A.C. | 250 V / 0.5 A |
| D.C. | 250 V / 0.1 A |
| | 125 V / 0.2 A |
| | 75 V / 0.5 A |

For SPDs with auxiliary contact, the product number ends with "1".

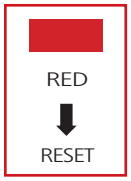


If the colour of the viewing window changes to red, the SPD was overloaded and must be replaced.

| DESCRIPTION | MW | ARRESTER CLASS | $U_C$ | EAN CODE | AVAILABLE | ORDER NO. |
|---|---|---|---|---|---|---|
| PHOTEC C 1000/20 | 3 | TII (C) | 1000 V DC | 9004840667073 | | **IS011210-A** |
| PHOTEC C 1000/20 + aux. contact | 3 | TII (C) | 1000 V DC | 9004840667080 | | IS011211-A |
| PHOTEC C 550/20 | 2 | TII (C) | 550 V DC | 9004840667097 | | **IS011250-A** |
| PHOTEC C 550/20 + aux. contact | 2 | TI (C) | 550 V DC | 9004840667103 | | IS011251-A |


SCHRACK
0
6
12
18
24
KANAL
9:43
07
C1 On
C2 On
C3 On
C4 On
MENU



*Energy does not get lost,*
*it just changes.*

# KWH-METERS

## CONTENTS

## kWh-METER 32A DIRECT

MGMIZ132

## TECHNICAL DATA

| | | |
|---|---|---|
| Voltage | | 2 wire meter 1 x 230V |
| Current | | 0,25-5(32) A |
| Starting current | | 20 mA |
| Frequency | | 50 Hz |
| Accuracy | active energy | Cl. B according to EN 50470-1, -3 |
| Measuring types | | +A |
| Meter constants | LED | 5 000 Imp./kWh |
| | Output | 1 000 Imp./kWh |
| Energy register | | 1 tarif register |
| Data retention time | | without voltage in the FLASH/EEPROM, at least 20 years |
| Display | version | LCD |
| | number of digits | 6 |
| | digitness | 5,1 |
| | digit size in the value range | appr. 2,7 x 6,25 (W x H) mm |
| | display of instantaneous values | scrolling |
| Operation | operation of button | for operation of display |
| Data interfaces | number | 1 |
| | S0-output | maximum 27 V DC, 27mA (passive) |
| | pulse length | 50ms |
| Energy supply | voltage path | < 0,4 W |
| EMC-characteristics | isolation resistance | Isolation: 4 kV AC, 50 Hz, 1 min |
| | surge voltage | EMC: 4 kV, impulse 1,2/50 µs, 2 W, ISO: 6 kV, impulse 1,2/50 µs, 500 W |
| | resistance against HF-fields | 10 V/m (under load) |
| Temperature range | operating | -25°C...+55°C |
| | limit / storage | -40°C...+70°C |
| Relative humidity | | 95%, non-condensing accord. To IEC 62052-11, EN 50470-1 and IEC 60068-2-30 |
| Housing | dimensions | DIN 43880 (1 SU pitch wide = 18 mm) |
| | class of protection | 2 |
| | degree of protection, housing, terminals | IP 20 |
| | material | polycarbonate glass-fibre-reinforced |
| | fire characteristics | acc. to IEC 62052-11 |
| | weight | appr. 67,5 g |
| Connection-cross section | current- / neutral conductor | max. 6 mm² |
| | auxiliary terminals | max. 2,5 mm² |
| Features | | impulse output, instantaneous values (scrolling: power, voltage, current, frequency and power factor) |

| DESCRIPTION | EAN CODE | AVAILABLE | ORDER NO. |
|---|---|---|---|
| kWh-meter 1-phase 32A direct with impulse output | 9004840621051 | | MGMIZ132 |

# COMPACT INDUSTRY METER KIZ

MGKIZ

## SCHRACK INFO

- Electricity meter for measuring of active energy in single- or two-tariff design for billing purposes
- Compact design, only 4 pitch wide, 2 tariffs
- DIN-Rail mounting acc. to IEC 60715
- Bus capable: M-Bus-interface, optional
- Impulse output S0
- LC-display with 7 digitals
- Measuring of instantaneous values
- With EC type-examination certificate acc. to directive 2004/22/EG (MID = Measuring Instrument Directive)

## TECHNICAL DATA

| | | |
|---|---|---|
| Voltage | 4-wire-neter | 3x230/400 V |
| | 2-wire-neter | 230 V |
| Current | | 0,25 – 5(65) A |
| | | 0,5 – 10(65) A |
| Starting current | | 20 mA |
| Frequency | | 50 Hz |
| Accuracy | active energy | Cl. B acc. to EN 50470-1, -3 |
| Measuring types | active energy | +A (with non-reverse ratchet) |
| Meter constants | LED | 10 000 Imp./kWh |
| | output | 1000 Imp./kWh |
| Energy registers | number | max. 2 tariff registers (T1 / T2) |
| Control input for tariff switching (option) | number / system voltage | max. 1 / 230 V AC |
| Data retention time | | without voltage in FLASH / EEPROM, at least 20 years |
| Display | version | LCD |
| | number of digits | 7 |
| | digitness | 6,1 |
| | digit size in the value range | approx. 5,8 x 3,5 mm (H x W) |
| Data interface (option) | M-Bus | acc. to DIN EN 13757-2, -3 (300 ... 9600 Baud) |
| Output (option) | number | 1 |
| | S0 | max. 27 V DC, 27 mA (passive) |
| | pulse length | 100 ms |
| Energy supply | switched-mode power supply | 3-phase from the measuring voltage |
| Power consumption | voltage path | < 0,55 VA / < 0,4 W |
| per phase (Basic meter) | current path | < 0,01 VA |
| EMC-characteristics | isolation resistance | Isolation: 4 kVAC, 50 Hz, 1 min |
| | surge voltage | EMC: 4 kV, Impulse 1,2/50 µs, 2 Ω, ISO: 6 kV, Impulse 1,2/50 µs, 500 Ω |
| | resistance against HF-field | 10 V/m (under load) |
| Temperature range | specified operating range | -25°C...+55°C |
| | limit range for operation, | |
| | storage and transportation | -40°C...+70°C |
| Relative humidity | | 95%, non-condensing acc. to IEC 62052-11, EN 50470-1 and IEC 60068-2-30 |
| Housing | dimensions | 4 TE = 72 x 90 x 61 mm (W x H x D) |
| | class of protection | II |
| | degree of protection, terminals | IP20 |
| | material | polycarbonate glass-fibre-reinforced |
| | fire characteristics | acc. to DIN EN 62052-11 |
| Weight | | approx. 350 g |
| Connection-cross section | current-/neutral terminals | max. 16 mm² |
| | voltage-/auxiliary terminals | max. 2,5 mm² |
| Further features | measuring of instantaneous values | power, voltage, current |

| DESCRIPTION | EAN CODE | AVAILABLE | ORDER NO. |
|---|---|---|---|
| Modular 4-wire-kwh-meter 65A direct, digital, 2 tariff, with MID | 9004840651447 | | MGKIZ065 |
| Modular 4-wire-kwh-meter 65A direct, digital, 2 tariff, with MID, with M-Bus | 9004840651454 | | MGKIZ365 |
| Modular 2-wire-kwh-meter 65A direct, digital, 2 tariff, with MID | 9004840651461 | | MGKIZ165 |
| Modular 2-wire-kwh-meter 65A direct, digital, 2 tariff, with MID, with M-Bus | 9004840651478 | | MGKIZ665 |


SCHRACK
C 32/3
OPEN

*Small things make perfection,*
*but perfection is no small thing.*

# INDEX OF ORDER NUMBERS, GENERAL TERMS OF DELIVERY

## CONTENTS

# INDEX OF ORDER NUMBERS

# General Terms of Delivery

**issued by the Austrian Electrical and Electronics Industry Association (FEEI)**

**1. Scope**

1.1. These General Terms shall govern legal transactions between business enterprises, namely the delivery of commodities and, mutatis mutandis, the rendering of services. Software transactions are with precedence governed by the Software Conditions issued by the Austrian Electrical and Electronics Industry Association, assembly work by the Terms and Conditions for Assembly Work issued by the Austrian Power Current and Light Current Engineering Industry and/or (where applicable) the Terms and Conditions for the Assembly of Electrical Equipment used in Medicine issued by the Austrian Electrical and Electronics Industry (the current versions are available at www.feei.at).

1.2. Any departure from the terms and conditions mentioned in 1.1 above shall be valid only if expressly accepted in writing by Seller.

**2. Submission of offers**

2.1. Seller's offers shall be deemed offers without engagement.

2.2. Tender documents and project documentation must not be duplicated nor made available to third parties without the permission of Seller. They may be claimed back at any time and shall be returned to Seller immediately if the order is placed elsewhere.

**3. Conclusion of contract**

3.1. The contract shall be deemed concluded upon written confirmation by Seller of an order received or upon dispatch of a delivery.

3.2. Particulars appearing in catalogues, folders etc. as well as any oral or written statements shall only be binding if Seller makes express reference to them in the confirmation of the order.

3.3. Subsequent amendments of or additions to the contract shall be subject to written confirmation.

**4. Prices**

4.1. Prices shall be quoted ex works or ex Seller's warehouse without VAT, packing and packaging, loading, disassembly, take-back and proper recycling and disposal of waste electrical and electronic equipment for commercial purposes as defined by the Ordinance Regulating the Handling of Waste Electrical Equipment. Buyer shall be liable for any and all charges, taxes or other duties levied in respect of delivery. If the terms of delivery include transport to a destination designated by Buyer, transport costs as well as the cost of any transport insurance desired by Buyer shall be borne by the latter. Delivery does not, however, include unloading and subsequent handling. Packaging materials will be taken back only by express agreement.

4.2. Seller reserves the right to modify prices if the order placed is not in accordance with the offer submitted.

4.3. Prices are based on costs obtaining at the time of the first quotation. In the event that the costs have increased by the time of delivery, Seller shall have the right to adjust prices accordingly.

4.4. In carrying out repair orders, Seller shall provide all services deemed expedient and shall charge Buyer for the same on the basis of the work input and/or expenditures required. The same holds for any services or additional services the expediency of which becomes apparent only as the repair order is executed. In such an event special notification of Buyer shall not be required.

4.5. Expenses for estimates of costs of repair and maintenance or for expert valuations shall be invoiced to Buyer.

**5. Delivery**

5.1. The period allowed for delivery shall commence at the latest of the following dates:

a) the date of order confirmation by Seller;

b) the date of fulfilment by Buyer of all the conditions, technical, commercial and other, for which he is responsible;

c) the date of receipt by Seller of a deposit or security due before delivery of the goods in question.

5.2. Buyer shall obtain whatever licences or approvals may be required from authorities or third parties for the construction of plant and equipment. If the granting of such licences or approvals is delayed for any reason the delivery period shall be extended accordingly.

5.3. Seller may carry out, and charge Buyer for, partial or advance deliveries. If delivery on call is agreed upon, the commodity shall be deemed called off at the latest one year after the order was placed.

5.4. In case of unforeseeable circumstances or circumstances beyond the parties control, such as all cases of force majeure, which impede compliance with the agreed period of delivery, the latter shall be extended in any case for the duration of such circumstances; these include in particular armed conflicts, official interventions and prohibitions, delays in transport or customs clearance, damages in transit, energy shortage and raw materials scarcity, labour disputes, and default on performance by a major component supplier who is difficult to replace. The aforesaid circumstances shall be deemed to prevail irrespective of whether they affect Seller or his subcontractor(s).

5.5. If a contractual penalty for default of delivery was agreed upon by contracting parties when the contract was concluded, it shall be executed as follows, and any deviations concerning individual items shall not affect the remaining provisions: Where delay in performance can be shown to have occurred solely through the fault of Seller, Buyer may claim for each completed week of delay an indemnity of at most one half of one per cent, a total of no more than 5 %, however, of the value of that part of the goods to be delivered which cannot be used on account of Seller's failure to deliver an essential part thereof, provided the Buyer has suffered a damage to the aforesaid extent. Assertion of rights of damages exceeding this extent is precluded.

6. Passage of risk and place of performance

6.1. Unless otherwise agreed, the delivery of goods is considered sold EXW in accordance with INCOTERMS® 2010.

6.2. For services, the place of performance shall be the place indicated in the written order confirmation, secondary to that at which the service is actually rendered by Seller. The risk in respect of such services or any part thereof shall pass to Buyer at the time the services have been rendered.

**7. Payment**

7.1. Unless otherwise agreed, one third of the purchase price shall fall due at the time of receipt by Buyer of the order confirmation of Seller, one third after half the delivery period has elapsed and the balance at the time of delivery. Irrespective thereof the turnover tax comprised in the amount of the invoice shall be paid within 30 days of the invoice date. If bankruptcy proceedings are instituted against the assets of Buyer or if an application for bankruptcy proceedings is not granted for insufficiency of assets, deliveries shall only be made against cash in advance.

7.2. In the case of part settlements the individual part payments shall fall due upon receipt of the respective invoices. The same shall apply to amounts invoiced for additional deliveries or resulting from additional agreements beyond the scope of the original contract, irrespective of the terms of payment agreed upon for the principal delivery.

7.3. Payment shall be made without any discount free Seller's domicile in the agreed currency. Drafts and checks shall be accepted on account of payment only, with all interest, fees and charges in connection therewith (such as col- lection and discounting charges) to be borne by Buyer.

7.4. Buyer shall not be entitled to withhold or offset payment on the grounds of any warranty claims or other counterclaims.

7.5. Payment shall be deemed to have been effected on the date at which the amount in question is at Seller's disposal.

7.6. If Buyer fails to meet the terms of payment or any other obligation arising from this or other legal transactions, Seller may without prejudice to his other rights

a) suspend performance of his own obligations until payments have been made or other obligations fulfilled, and exercise his right to extend the period of delivery to a reasonable extent,

b) call in debts arisen from this or any other legal transactions and charge default interest amounting to 1.25 % per month plus turnover tax for these amounts beginning with the due dates, unless Seller proves costs exceeding this.

c) only perform other legal transactions against cash in advance in the case of qualified insolvency, in other words, following two delays in payment.

In any case Seller has the right to invoice all expenses arising prior to a lawsuit, especially reminder charges and lawyer's fees.

7.7. Discounts or bonuses are subject to complete payment in due time.

7.8. Seller retains title to all goods delivered by him until receipt of all amounts invoiced including interests and charges. Buyer herewith assigns his claim out of a resale of conditional commodities, even if they are processed, transformed or combined with other commodities, to Seller to secure the latter's purchase money claim. In the case of resale granting respite Buyer shall have the power of disposal of the product under retention of ownership only with the proviso that upon reselling Buyer notifies the secondary buyer of the assignment for security or enters the assignment in his account books. Upon request Buyer has to notify the assigned claim and the debtor thereof to Seller, and to make all information and material required for his debt collection available and to notify the assignment to the third-party debtor. If the goods are attached or otherwise levied upon, Buyer shall draw attention to Sellers title and immediately inform Seller of the attachment or levy.

**8. Warranty and acceptance of obligation to repair defects**

8.1. Once the agreed terms of payment have been complied with, Seller shall, subject to the conditions hereunder, remedy any defect existing at the time of acceptance of the article in question whether due to faulty design, material or manufacture, that impairs the functioning of said article. From particulars appearing in catalogues, folders, promotional literature as well as written or oral statements which have not been included in the agreement no warranty obligations may be deduced.

8.2. Unless special warranty periods operate for individual items the warranty period shall be 12 months. These conditions shall also apply to any goods supplied, or services rendered in respect of goods supplied, that are firmly attached to buildings or the ground. The warranty period begins at the point of passage of risk acc. to paragraph 6.

8.3. For improved or exchanged parts, the warranty period shall start again, but shall end in any case 6 months after the original warranty period has expired.

8.4. If delivery or the performance of services is delayed for reasons outside the control of Seller, the warranty period shall begin 2 weeks after Seller is ready to deliver or perform services.

8.5. The foregoing warranty obligations are conditional upon the Buyer giving within a reasonable period notice in writing of any defects that have occurred and such notice reaching the Seller. Buyer shall prove within a reasonable period the presence of a defect, in particular he shall make available within a reasonable period to Seller all material and data in his possession. Upon receipt of such notice Seller shall, in the case of a defect covered by the warranty under 8.1 above, have the option to replace the defective goods or defective parts thereof or else to repair them on Buyer's premises or have them returned for repair, or to grant a fair and reasonable price reduction.

8.6. Any expenses incurred in connection with rectifying defects (e. g. expenses for assembly and disassembly, transport, waste disposal, travel and siteto-quarters time) shall be borne by Buyer. For warranty work on Buyer's premises Buyer shall make available free of charge any assistance, hoisting gear, scaffolding and sundry supplies and incidentals that may he required. Replaced parts shall become the property of Seller.

8.7. If an article is manufactured by Seller on the basis of design data, design drawings, models or other specifications supplied by Buyer, Seller's warranty shall be restricted to non-compliance with Buyers specifications.

8.8. Seller's warranty obligation shall not extend to any defects due to assembly and installation work not undertaken by Seller, inadequate equipment, or due to non-compliance with installation requirements and operating conditions, overloading of parts in excess of the design values stipulated by Seller, negligent or faulty handling or the use of inappropriate materials, nor for defects attributable to material supplied by Buyer. Nor shall Seller be li- able for damage due to acts of third parties, atmospheric discharges. Excess voltage and chemical influences. The warranty does not cover the replacement of parts subject to natural wear and tear. Seller accepts no warranty for the sale of used goods.

8.9. The warranty shall lapse immediately if, without written consent of Seller, Buyer himself or a third party not expressly authorised undertakes modifications or repairs on any items delivered.

8.10. Claims acc. to § 933b ABGB are struck by the statute of limitation with lapse of the period mentioned under point 8.2.

8.11. The provisions of sub-paragraphs 8.1 to 8.10 shall apply, mutatis mutandis, to all cases where the obligation to repair defects has to be accepted for other reasons laid down by law.

**9. Withdrawal from contract**

9.1. Buyer may withdraw from the contract only in the event of delays caused by gross negligence on the part of Seller and only after a reasonable period of grace has elapsed. Withdrawal from contract shall be notified in writing by registered mail.

9.2. Irrespective of his other rights Seller shall be entitled to withdraw from the contract

a) if the execution of delivery or the inception or continuation of services to be rendered under the contract is made impossible for reasons within the responsibility of Buyer and if the delay is extended beyond a reasonable period of grace allowed;

b) if doubts have arisen as to Buyer's creditworthiness and if same fails, on Seller's request, to make an advance payment or to provide adequate security prior to delivery, or

c) if, for reasons mentioned in 5.4, the period allowed for delivery is extended by more than half of the period originally agreed or by at least 6 months, or

d) if Buyer does not or does not properly meet the obligations imposed as per paragraph 13.

9.3. For the reasons given above withdrawal from the contract shall also be possible in respect of any outstanding part of the delivery or service contracted for.

9.4. If bankruptcy proceedings are instituted against Buyer or an application for bankruptcy proceedings is not granted for insufficiency of assets, Seller may withdraw from the contract without allowing a period of grace. If this withdrawal is taken, it shall take effect immediately upon the decision that the business will not be continued. If the business will be continued, a withdrawal shall not take effect until 6 months after the institution of bankruptcy proceedings or after an application for bankruptcy proceedings has not been granted for insufficiency of assets. In any case, the contract shall be terminated immediately unless the bankruptcy law to which Buyer is subject conflicts with this or if termination of the contract is necessary to prevent significant damages to Seller.

9.5. Without prejudice to Seller's claim for damages including expenses arising prior to a lawsuit, upon withdrawal from contract any open accounts in respect of deliveries made or services rendered in whole or in part shall be settled according to contract This provision also covers deliveries or services not yet accepted by Buyer as well as any preparatory acts performed by Seller. Seller shall, however, have the option alternatively to require the restitution of articles already delivered.

9.6. Withdrawal from contract shall have no consequences other than those stipulated above.

9.7. The assertion of claims on the ground of laesio enormis, error, or lapse of purpose by the Buyer is excluded.

**10. Disposal of waste electrical and electronic equipment**

10.1. The Buyer of electrical/electronic equipment for commercial purposes, incorporated in Austria, is responsible for the financing of the collection and treatment of waste electrical and electronic equipment as defined by the Ordinance Regulating the Handling of Waste Electrical Equipment, if he is himself the user of the electrical/electronic equipment. If the Buyer is not the end user, he shall transfer the full financial commitment to his customer by agreement and furnish proof thereof to the Seller.

10.2. The Buyer incorporated in Austria shall ensure that the Seller is provided with all information necessary to meet the Seller's obligations as manufacturer/importer, particularly according to §§ 11 and 24 of the Ordinance Regulating the Handling of Waste Electrical Equipment and the Waste Management Act.

10.3. The Buyer incorporated in Austria is liable vis-à-vis the Seller for any damage and other financial disadvantages incurred by Seller due to Buyer's failure to meet or fully meet his financing commitment or any other obligations according to Article 10. The Buyer shall bear the burden of proof of performance of this obligation.

**11. Seller's liability**

11.1. Outside the scope of the Product Liability Act, Seller shall be liable only if the damage in question is proved to be due to intentional acts or acts of gross negligence, within the limits of statutory provisions. Seller's total liability in cases of gross negligence is limited to the net value of the order or EUR 500,000, depending on which amount is lower.

11.2. For each incident of damage, Seller shall be liable for 25% of the net value of the order or EUR 125,000, depending on which amount is lower.

11.3. Seller shall not be liable for damage due to acts of ordinary negligence nor for consequential damages or damages for pure economic loss, indirect damages, loss of production, financing costs, costs for replacement energy, loss of energy, data or information, loss of profits, loss of savings or interest, or damage resulting from third-party claims against buyer.

11.4. Seller shall not be liable for damages in case of non-compliance with instructions for assembly, commissioning and operation (such as are contained in instructions for use) or non-compliance with licensing requirements.

11.5. Claims that exceed the contractual penalties that were agreed on are excluded from the respective title. The provisions of paragraph 11 apply exclusively for all claims by Buyer against Seller, regardless of the legal basis or entitlement, and also apply to all employees, subcontractors and subsuppliers of Seller.

**12. Industrial property rights and copyrights**

12.1. Buyer shall indemnify Seller and hold him harmless against any claims for any infringement of industrial property rights raised against him if Seller manufactures an article pursuant to any design data, design drawings, models or other specifications made available to him by Buyer.

12.2. Design documents such as plans and drawings and other technical specifications as well as samples, catalogues, prospectuses, pictures and the like shall remain the intellectual property of Seller and are subject to the relevant statutory provisions governing reproduction, imitation, competition etc. The provisions of 2.2 above shall also cover design documents.

**13. Compliance with export provisions**

13.1. When passing on goods delivered by Seller to third parties (as well as any related documentation, regardless of the method of provision or the services performed by Seller [including technical support of any kind]), Buyer must comply with the applicable regulations of national and international (re-)export provisions. In any case, Buyer must observe the (re-)export provisions of Seller's country of residence, the European Union and the United States of America.

13.2. If necessary for export controls, Buyer must provide Seller with all necessary information immediately after being requested to do so, for example, information about the final recipient, final destination and purpose of the goods or services.

**14. General**

Should individual provisions of the contract or of these provisions be invalid the validity of the other provisions shall not be affected. The invalid provision shall be replaced by a valid one, which comes as close to the target goal as possible.

**15. Jurisdiction and applicable law**

Any litigations arising under the contract including litigations over the existence or non-existence thereof shall fall within the exclusive jurisdiction of the competent court at Sellers domicile; the competent court of the Bezirksgericht Innere Stadt, Vienna, shall have exclusive jurisdiction if Seller is domiciled in Vienna. The contract is subject to Austrian law excluding the referral rules. Application of the UN Convention on Contracts for the International Sale of Goods is renounced.

**16. Proviso**

The execution of the contract by Seller is subject to the condition that there are no obstacles standing in the way of execution due to national or international (re-)export provisions, and especially no embargos and/or other sanctions.

**Last revised in September 2011**

CONNECTING COMPETENCE.

# THE COMPANY

## HEADQUARTERS


SCHRACK TECHNIK GMBH
Seybelgasse 13, A-1230 Vienna
PHONE +43(0)1/866 85-5900
FAX +43(0)1/866 85-98800
E-MAIL export@schrack.com


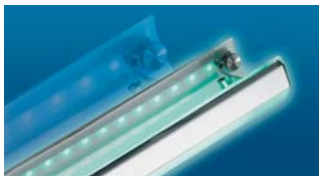

## SCHRACK COMPANIES

### BELGIUM
SCHRACK TECHNIK B.V.B.A
Twaalfapostelenstraat 14
BE-9051 St-Denijs-Westrem
PHONE +32 9/384 79 92
FAX +32 9/384 87 69
E-MAIL info@schrack.be

### BOSNIEN-HERZEGOWINA
SCHRACK TECHNIK BH D.O.O.
Put za aluminijski kombinat bb
BH-88000 Mostar
PHONE +387/36 333 666
FAX +387/36 333 667
E-MAIL schrack@schrack.ba

### BULGARIA
SCHRACK TECHNIK EOOD
Prof. Tsvetan Lazarov 162
Druzhba - 2
BG-1000 Sofia
PHONE +359/(2) 890 79 13
FAX +359/(2) 890 79 30
E-MAIL sofia@schrack.bg

### CROATIA
SCHRACK TECHNIK D.O.O.
Zavrtnica 17
HR-10000 Zagreb
PHONE +385 1/605 55 00
FAX +385 1/605 55 66
E-MAIL schrack@schrack.hr

### POLAND
SCHRACK TECHNIK POLSKA SP.ZO.O.
ul. Staniewicka 5
PL-03-310 Warszawa
PHONE +48 22/205 31 00
FAX +48 22/205 31 01
E-MAIL kontakt@schrack.pl

### ROMANIA
SCHRACK TECHNIK SRL
Str. Simion Barnutiu nr. 15
RO-410204 Oradea
PHONE +40 259/435 887
FAX +40 259/412 892
E-MAIL schrack@schrack.ro

### SERBIA
SCHRACK TECHNIK D.O.O.
Kumodraska 260
RS-11000 Beograd
PHONE +38 1/11 309 2600
FAX +38 1/11 309 2620
E-MAIL office@schrack.co.rs

### SLOVAKIA
SCHRACK TECHNIK S.R.O.
Ivanská cesta 10/C
SK-82104 Bratislava
PHONE +42 (02)/491 081 01
FAX +42 (02)/491 081 99
E-MAIL info@schrack.sk

### SLOVENIA
SCHRACK TECHNIK D.O.O.
Pameče 175
SLO-2380 Slovenj Gradec
PHONE +38 6/2 883 92 00
FAX +38 6/2 884 34 71
E-MAIL schrack.sg@schrack.si

### CZECH REPUBLIC
SCHRACK TECHNIK SPOL. SR.O.
Dolnomecholupska 2
CZ-10200 Praha 10 – Hostivar
PHONE +42(0)2/810 08 264
FAX +42(0)2/810 08 462
E-MAIL praha@schrack.cz

### HUNGARY
SCHRACK TECHNIK KFT.
Vidor u. 5
H-1172 Budapest
PHONE +36 1/253 14 01
FAX +36 1/253 14 91
E-MAIL schrack@schrack.hu